HELLA ACADEMY #HMEAMP-1

Multiplexing - Advanced

Multiplexing



Conducted by: **Aydin Almassian**

Practical information:

Duration: **2 days**

Off-site: **Showroom No. S3B2SR03**

1490 AED

Maximum **6 participants**

Fill out the form, and our team will be in touch shortly!

Course description

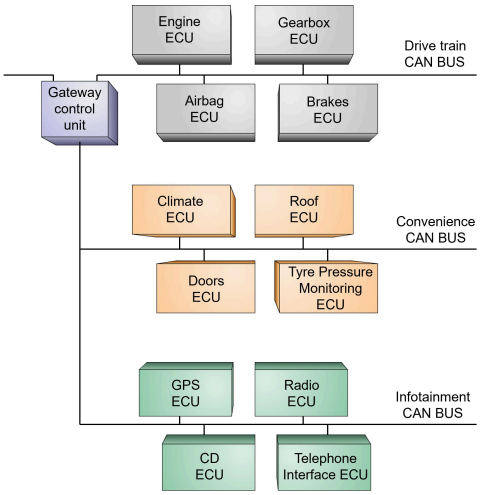

Build on your vehicle network knowledge and develop your skills in CAN bus diagnostics. This practical course focuses on using an oscilloscope to measure, read, and interpret communication signals between control units. Through hands-on workshop exercises, you'll learn to recognise signal irregularities and follow a systematic approach to diagnosing network faults with greater accuracy and confidence.

Target group

Automotive mechanic, automotive electrician, automotive mechatronics technician, automotive master mechanic

Learning goals

- Understand vehicle communication systems (multiplexing)
- Identify key network protocols (CAN, LIN, etc.)
- Interpret data communication between control units
- Diagnose network and communication faults
- Apply a systematic diagnostic approach

Course content

- Multiplexing fundamentals
- CAN, LIN and network protocols
- Control unit communication
- Network architecture
- Signal transmission basics
- Fault diagnosis in networks
- Diagnostic tools & techniques
- Practical workshop exercises

What's included

1490 AED plus VAT, includes:lunch, participant documents,coffee, certificate



Your trainer

Aydin Almassian

Aydin Almassian has over 20 years of experience in the automotive industry, with a specialization in the aftermarket and diagnostics. Since 2019, he has played a key role in the development and expansion of Hella's Electric/Electronic products. Currently, as Product specialist and Technical Manager at Hella Middle East FZE, Aydin Almassian oversees these products while continuously driving innovation and technical excellence in the region.In addition, Aydin Almassian played a pivotal role in the launch, development, and ongoing management of the Hella Gutmann Academy at Hella Middle East. Under his direction, the academy provides specialized training in diagnostics, ADAS (Advanced Driver Assistance Systems) and calibration, helping to advance the skills and knowledge of automotive professionals.Within 5 years at Hella Middle East, Aydin Almassian remains committed to strengthening the company's leadership in both product development and technical expertise, ensuring that Hella continues to be a key player in the evolving automotive industry.

Decode Vehicle Communication

Step into the world of multiplexing and discover how vehicle systems talk, share data, and operate in perfect sync.From CAN networks to smart integration—learn it all.Inquire Now!

Enquire now