WORK LAMPS

Product suggestions

QUALITY TEST

HELLA quality at a glance

HELLA defines demanding quality criteria that apply throughout the entire manufacturing process. Therefore, before the products are put on to the market, they are subjected to the toughest conditions in various test procedures. All products undergo extensive tests in accordance with HELLA's own standard 67001. This guarantees the high level of HELLA quality that you can always rely on.

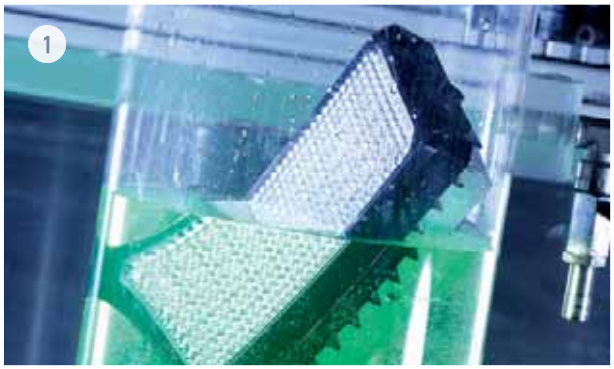

Quality tests

1. **Immersion and pressure tightness test |** HELLA LED products have a high level of tightness so that no water can penetrate the devices.
2. **Dust test |** HELLA LED products are very dustproof to protect sensitive components from dust.
3. **Spray water test |** HELLA LED products are splashwater-proof.
4. **Heat, humidity and cold test |** HELLA LED products defy strong temperature fluctuations and changing humidity.
5. **High-pressure jet cleaner test |** HELLA LED products can be cleaned using a high-pressure jet cleaner without a problem.
6. **Vibration test |** HELLA LED products offer guaranteed high resistance to vibrations.

IP protection classes: Safety when buying

IP stands for International Protection
The standard exists to specify the protection of electrical equipment against the ingress of solid or liquid foreign bodies such as dust or water on a standardised basis. The degree of protection is determined by a series of tests, also standardised, to determine how well a product is protected against environmental influences.

The degrees of protection are determined in accordance with DIN 40 050 Part 9.
Work lamps, for example, are designed for different degrees of protection:

Protection class IP 6K7
Dust must not penetrate. Even during temporary immersion, no water is allowed to penetrate.

Protection class IP 6K8
Dust must not penetrate. Protection against continuous immersion.

Protection class IP 6K9K
Dust must not penetrate. Water that is directed onto the housing during high pressure/steamjet cleaning must not have any harmful effects: the water pressure is approx. 100 bar.

First digit:
Protection against ingress of solid foreign bodies (dust)

IP 6K7

Second digit:
Protection against liquid (water)

ILLUMINATION OF THE WORKING AREA

How is homogeneous illumination achieved?

Homogeneous illumination of the work area can be achieved through a combination of various factors.
The interplay between the following factors is vital to achieving the right light pattern for the application area.

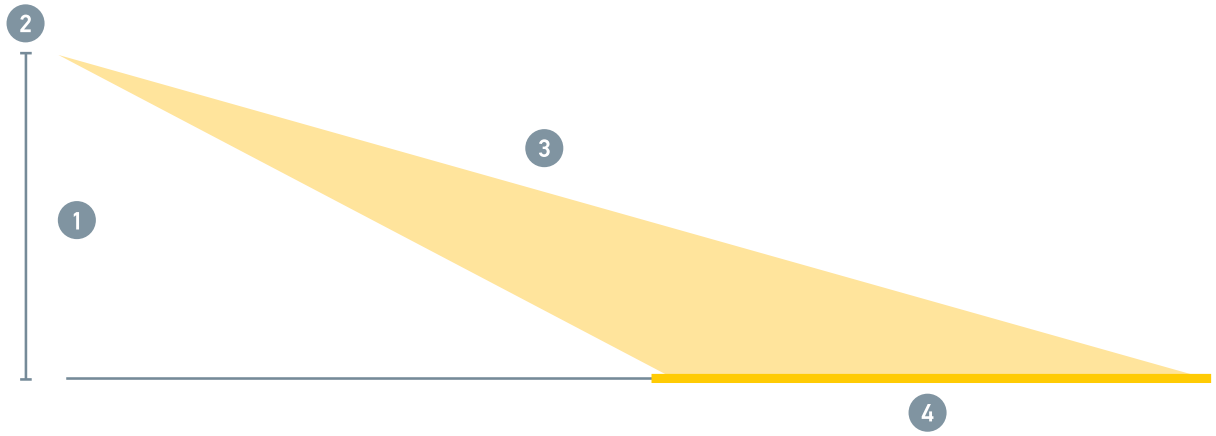

1. Mounting height: The light pattern and illumination vary at different surface mounting heights. The optimal surface mounting height is > 2.5 m.

2. Reflector system: The reflectors of HELLA work lamps are calculated in such a way to ensure that the working area is evenly illuminated and the light optimally used.

3. Tilt angle: Changes to the work lamp angle completely change the illumination.
The tilt angle should be between 2° and 15° depending on the application.

4. Illuminated area: Depending on the application, combining close-range and long-range illumination can provide an ideal lighting solution for everyday work.

The advantages are increased safety, because the surroundings and potential obstacles or danger spots can be detected more quickly. Plus increased efficiency at work, because the body is subjected to less strain, allowing workers to stay focused for longer periods.

NEW S SERIES

70 S series module

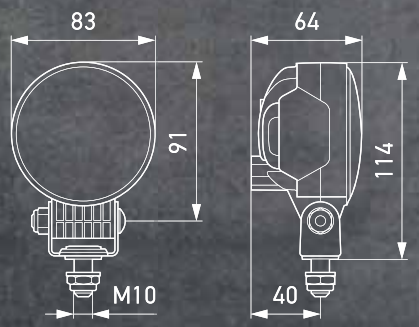

~ 1,000 lm/~ 12 W/2 LEDs

1G0 996 776-001 Close-range illumination

1G0 996 776-011 Long-range illumination

~ 1,850 lm/~ 19 W/4 LEDs

1G0 996 776-201 Close-range illumination

1G0 996 776-211 Long-range illumination

S series Power Beam

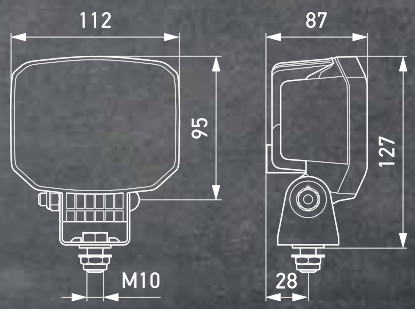

~ 1,000 lm/~ 12 W/2 LEDs

1GA 996 588-001 Close-range illumination

1GA 996 588-011 Long-range illumination

~ 1,850 lm/~ 19 W/4 LEDs

1GA 996 588-201 Close-range illumination

1GA 996 588-211 Long-range illumination

Simple: Easy to retrofit

Resistant: Permanently withstands operating conditions

Optimised: Excellent value for money

Modern: Innovative LED technology and fully automated production

Well thought out: Plastic housing and lens for weight reduction and higher corrosion resistance

NEW

Module 70 S

W x H x D 83 mm x 114 mm x 64 mm

Upright or pendant surface mounting, multi-voltage 9 – 32 V, degree of protection IP 6K7/IP 6K9K, ECE R10 approval, CISPR 25 Class 5, DEUTSCH DT connection, plastic housing

Fig. 1: **~ 1,000 lm/~ 12 W/2 LEDs**

1G0 996 776-001 Close-range illumination

1G0 996 776-011 Long-range illumination

Fig. 2: **~ 1,850 lm/~ 19 W/4 LEDs**

1G0 996 776-201 Close-range illumination

1G0 996 776-211 Long-range illumination

NEW

Power Beam S

W x H x D 112 mm x 127 mm x 87 mm

Upright or pendant surface mounting, multi-voltage 9 – 32 V, degree of protection IP 6K7/IP 6K9K, ECE R10 approval, CISPR 25 Class 5, DEUTSCH DT connection, plastic housing

Fig. 1: **~ 1,000 lm/~ 12 W/2 LEDs**

1GA 996 588-001 Close-range illumination

1GA 996 588-011 Long-range illumination

Fig. 2: **~ 1,850 lm/~ 19 W/4 LEDs**

1GA 996 588-201 Close-range illumination

1GA 996 588-211 Long-range illumination

Ultra Beam LED (Gen. 2)

W x H x D 115 mm x 132 mm x 85 mm

Upright or pendant surface mounting, multi-voltage 9 – 32 V, 8 LEDs, power consumption 50 W, light output 4,400 lm, degree of protection IP 6K9K/IP 6K8, ECE R10 approval, CISPR 25 Class 5, DEUTSCH DT connection

1GA 995 606-001 Close-range illumination

1GA 995 606-011 Long-range illumination

Q90 LED compact

W x H x D 95 mm x 122 mm x 65 mm

Upright or pendant surface mounting, multi-voltage 9 – 32 V, 4 LEDs, power consumption 15 W, light output 1,200 lm, degree of protection IP 6K9K/IP 6K7, ECE R10 approval, CISPR 25 Class 5, connection 500 mm cable, heat conductive plastic housing

1GA 996 284-001 Close-range illumination

1GA 996 284-011 Long-range illumination

Further information and our complete product range can be found in our online catalogue: **www.hella.com/upc**
Also use the item comparison and the selection filters to find the right product quickly.

NEW

Black Magic Cube
(2.7″)

W x H x D 70 mm x 72 mm x 60 mm (2.7″x 2.8″x 2.4″)

Upright or pendant surface mounting, multi-voltage 10 – 30 V, power consumption 20 W, light output 1,400 lm, degree of protection IP 68/IP 69K, ECE type approval: ECE R10, connection 500 mm cable with DEUTSCH DT connection

Individual headlamps

1FA 358 176-841 Close-range illumination

NEW

Black Magic Cube
(3.2″)

W x H x D 81 mm x 83 mm x 78 mm (3.2″x 3.3″x 3.0″)

Upright or pendant surface mounting, multi-voltage 10 – 30 V, power consumption 40 W, light output 3,000 lm, degree of protection IP 68/IP 69K, ECE type approval: ECE R10, connection 500 mm cable with DEUTSCH DT connection

Individual headlamps

1FA 358 176-851 Close-range illumination

1FA 358 176-861 Long-range illumination

NEW

Black Magic Mini Light Bars

(6.2″)

W x H x D 157 mm x 50 mm x 60 mm (6.2″x 2.0″x 2.4″)

Upright or pendant surface mounting, multi-voltage 10 – 30 V, power consumption 30 W, light output max. 1,600 lm, degree of protection IP 68/IP 69K, 6 bright high-performance LEDs, ECE type approval: ECE R10, connection 800 mm cable with open ends

1FB 358 176-201 Close-range illumination

1FB 358 176-211 Long-range illumination

NEW

Black Magic Mini Light Bars

(Flush mounting, 6.2″)

W x H x D 196 mm x 62 mm x 53 mm (7.7″x 2.4″x 2.0″)

Flush mounting, multi-voltage 10 – 30 V, power consumption 30 W, light output max. 1,600 lm, degree of protection IP 68/IP 69K, 6 bright high-performance LEDs, ECE type approval: ECE R10, connection 800 mm cable with open ends

1FB 358 176-221 Close-range illumination

Further information and our complete product range can be found in our online catalogue: **www.hella.com/upc**
Also use the item comparison and the selection filters to find the right product quickly.

FACT VS. FICTION

The truth about lumens

The luminous flux of work lamps is measured in lumens. The lumen value is one of the decisive factors when choosing a particular LED work lamp. What some manufacturers do not tell you is that the high lumen specifications on their packaging are "calculated" lumens and not "measured" lumens.

Using lumens as a "currency" for the quality of a headlamp is wrong!

With the change to LED technology, the term “lumen” – the unit of measurement for the intensity of a light – was hyped so much that a sort of “battle of the lumens” has been taking place ever since. In this battle, the terms "calculated lumens" and "measured lumens" are often used.

What are they?
HELLA provides the “measured” lumen value, meaning that it provides a reliable value for the actual light intensity. The lumen value not only stems from the LED used, but from all components of the headlamp involved.

From here, some competitors calculate the light output without taking system losses into account (= calculated lumens).

HELLA measures the total effective light output here, which is also promised (= measured lumens).

Each work lamp suffers output losses due to the following:

1. Electronic components and LEDs transform energy to heat: 25–35% loss
2. Reflector or lens system: 5–15 % loss

Calculated lumen ≠ measured lumen

Plain language
This means that, for many competitors, up to 50 % of the lumen value should be deducted. In most cases, the lumen values of the individual LEDs are added together. The sum is indicated as light output, which does not correspond to the measured light output.

HELLA VALUEFIT compared

HELLA VALUEFIT brand products offer real added value at a price in line with the market. If you compare this cost-effective alternative from HELLA with similar competitor products, you will see that HELLA VALUEFIT offers you very good products with quality advantages.

All the spare parts meet the relevant technical specifications, are safe and reliable, and facilitate lower cost repairs. Shop with HELLA VALUEFIT tested quality at a good price!

	HELLA VALUEFIT S2500 LED	Competitors
Light output specified by the manufacturer	2500 lm	2160 lm
Measured light output	2476 lm	1264 lm
Power consumption	25 W	18 W
Voltage range	10 – 30 V	12 – 36 V
IP degree of protection	IP 6K9K	IP 69
Operating temperature	- 40°C to + 50°C	- 30 °C to + 50 °C
Salt spray resistance	240 h	Not tested
Thermal management	Yes	Yes
Approval	ECE-R10	ECE-R10
Isolux diagram Mounting position: 2.5 m Inclination: 5°	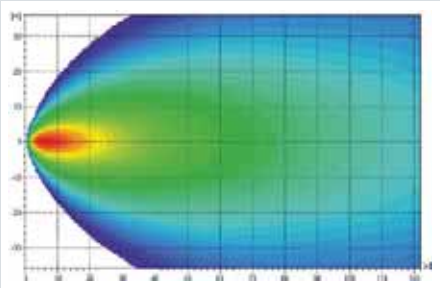	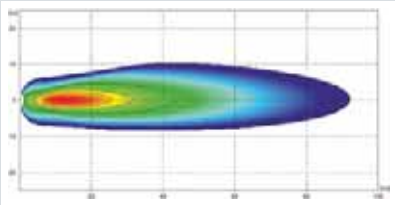
Conclusion	**Good light efficiency, homogeneous light distribution**	**Weak light efficiency, heterogeneous light distribution**

HELLA VALUEFIT

R1500 LED

W x H x D 107 mm x 133 mm x 41.5 mm

Upright or pendant surface mounting, multi-voltage 10 – 30 V, 9 LEDs, power consumption 15 W, light output 1,500 lm, degree of protection IP 6K9K, ECE R10 approval, connection 800 mm cable

1G0 357 101-012 Close-range illumination

R2200 LED

W x H x D 114 mm x 137 mm x 41.5 mm

Upright or pendant surface mounting, multi-voltage 10 – 30 V, 14 LEDs, power consumption 25 W, light output 2,200 lm, degree of protection IP 6K9K, ECE R10 approval, connection 800 mm cable

1G1 357 105-022 Large-area work illumination

S1500 LED

W x H x D 100 mm x 129 mm x 40 mm

Upright or pendant surface mounting, multi-voltage 10 – 30 V, 9 LEDs, power consumption 15 W, light output 1,500 lm, degree of protection IP 6K9K, ECE R10 approval

800 mm cable connection

1GA 357 103-012 Close-range illumination

3,000 mm cable connection

1GA 357 103-022 Close-range illumination

S2500 LED

W x H x D 108 mm x 137 mm x 48 mm

Upright or pendant surface mounting, multi-voltage 10 – 30 V, 16 LEDs, power consumption 25 W, light output 2,500 lm, degree of protection IP 6K9K, ECE R10 approval

800 mm cable connection

1GA 357 106-022 Large-area work illumination

3,000 mm cable connection

1GA 357 106-032 Large-area work illumination

Further information and our complete product range can be found in our online catalogue: **www.hella.com/upc**
Also use the item comparison and the selection filters to find the right product quickly.

HELLA VALUEFIT

S3000 LED

W x H x D 100 mm x 123 mm x 73 mm

Upright or pendant surface mounting, multi-voltage 10 – 48 V, 9 LEDs, power consumption 30 W, light output 3,000 lm, degree of protection IP 67/IP 6K9K, ECE R10 approval, DEUTSCH DT connection, incl. 800 mm cable

1GA 357 109-002 Close-range illumination

1GA 357 109-012 Long-range illumination

1GA 357 109-022 Close-range illumination (amber lens)

NEW

PS1000 LED

W x H x D 99.4 mm x 128.5 mm x 34 mm

Upright or pendant surface mounting, multi-voltage 10 – 30 V, 9 LEDs, power consumption 9 W, light output 1,000 lm, degree of protection IP 6K7/IP 6K9K, ECE R10 approval, 800 mm cable connection

The first VALUEFIT work lamp with a plastic housing!

1GA 357 114-002 Close-range illumination

Thermal management system
The new HELLA VALUEFIT work lamps have a new innovative thermal management system. This achieves an optimum light output depending on the ambient temperature and extends the service life of the work lamps.

NEW

TS1700 LED

W x H x D 70.5 mm x 95 mm x 41 mm

Upright or pendant surface mounting, multi-voltage 10 – 30 V, 4 LEDs, power consumption 24 W, light output 1,700 lm, degree of protection IP 6K7/IP 6K9K, ECE R10 approval, 800 mm cable connection, thermal management system*

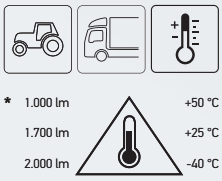

1GA 357 110-002 Close-range illumination

NEW

TR1700 LED

W x H x D 75.5 mm x 98 mm x 41 mm

Upright or pendant surface mounting, multi-voltage 10 – 30 V, 4 LEDs, power consumption 24 W, light output 1,800 lm, degree of protection IP 6K7/IP 6K9K, ECE R10 approval, 800 mm cable connection, thermal management system*

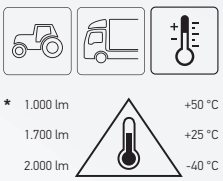

1G0 357 111-002 Close-range illumination

Further information and our complete product range can be found in our online catalogue: **www.hella.com/upc**
Also use the item comparison and the selection filters to find the right product quickly.

HELLA VALUEFIT

NEW

TS3000 LED

W x H x D 101 mm x 114.5 mm x 45 mm

Upright or pendant surface mounting, multi-voltage 10 – 30 V, 9 LEDs, power consumption 31 W, light output 3,000 lm, degree of protection IP 6K7/IP 6K9K, ECE R10 approval, 800 mm cable connection, thermal management system**

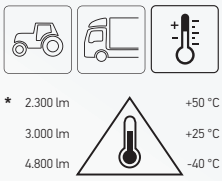

1GA 357 112-002 Close-range illumination

NEW

TR3000 LED

W x H x D 109 mm x 120 mm x 45 mm

Upright or pendant surface mounting, multi-voltage 10 – 30 V, 9 LEDs, power consumption 31 W, light output 3,000 lm, degree of protection IP 6K7/IP 6K9K, ECE R10 approval, 800 mm cable connection, thermal management system**

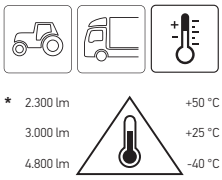

1G0 357 113-002 Close-range illumination

NEW

PS1000 LED

W x H x D 99.4 mm x 128.5 mm x 34 mm

Upright or pendant surface mounting, multi-voltage 10 – 30 V, 9 LEDs, power consumption 9 W, light output 1,000 lm, degree of protection IP 6K7/IP 6K9K, ECE R10 and ECE R23 approval, 800 mm cable connection, corrosion-free plastic housing

2ZR 357 114-501 800 mm cable

NEW

TS1700 LED

W x H x D 70.5 mm x 95 mm x 41 mm

Upright or pendant surface mounting, multi-voltage 10 – 30 V, 4 LEDs, power consumption 24 W, light output 1,700 lm, degree of protection IP 6K7/IP 6K9K, ECE R10 and ECE R23 approval, aluminium housing, thermal management*

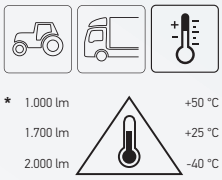

2ZR 357 110-501 200 mm cable

2ZR 357 110-511 3,000 mm cable

2ZR 357 110-521 200 mm cable, DEUTSCH DT connection

2ZR 357 110-531 200 mm cable with AMP SUPERSEAL

Further information and our complete product range can be found in our online catalogue: **www.hella.com/upc**
Also use the item comparison and the selection filters to find the right product quickly.

ONLINE INFORMATION

Find the right product with ease

Our online information is designed to let you reliably and conveniently identify the latest HELLA products and find out all the important details. No matter what you are looking for, we are sure to have the right part in our range.

HELLA online catalogue

The online universal parts catalogue offers you a quick and up-to-date overview of products in the categories of lighting, electrics and thermal management for a wide range of vehicles.

www.hella.com/upc

Website Truck

Practical and informative. Everything surrounding vehicle lighting for the truck sector: Discover here what products and innovations HELLA has to offer in this area!

www.hella.com/truck

Website Agriculture

Optimal solutions designed especially for the requirements of agricultural, construction and forestry machines as well as special vehicles. Discover our full product range.

www.hella.com/agriculture

Social Media

LinkedIn: Get in touch with us on our LinkedIn channel "HELLA Aftermarket" and find out everything about new products and current trends in the automotive industry.

Instagram: On Instagram, we connect on the community channel "@hella.experiences" with all those who have consciously chosen us and, therefore, quality products from HELLA for their vehicle, and who share this creatively and expressively with the whole world.

Facebook: Current information, promotions and videos.

YouTube: HELLA videos.

HELLA Asia Singapore Pte Ltd
Regional Headquarters Asia Pacific
Independent Aftermarket
2 International Business Park
#02-12 The Strategy
Singapore 609930
Tel: +65 6854 7300
Fax: +65 6854 7302
E-mail: info.sg@hella.com
Internet: www.hellaasia.com

HELLA Limited
Unit 6 Appletree Industrial Estate
Chipping Warden
Banbury, Oxon
OX17 1LL
England, UK
Tel.: (01295) 662400
Fax: 0800 7832571
E-mail: hella.sales@hella.com
Website: www.hella.co.uk

© HELLA GmbH & Co. KGaA, Lippstadt
9ZZ 999 142-964 J01792/04.22/KB/0.4
Subject to technical and price modifications.
Printed in Germany

www.hella.com/upc
www.hella.com/truck
www.hella.com/agriculture