BRIEF INFORMATION

Rotatory smart actuator for 360° angle

- → Actuator controls the position of its output gear according to the set position
- → Precise position control using HELLA CIPOS® technology
- → Electrical rotation (right/left) with high torque
- → Flexible operating angle range with up to eight full rotations
- → “True power on” function for angle ranges < 180°
- → Integrated electronics monitor actuator function
- → Error message and error memory
- → Self-blocking transmission

PRODUCT FEATURES

The rotatory smart actuator for 360° angle from HELLA permits a broad range of applications even in harsh environmental conditions.

In coolant circuits, the rotatory smart actuator for 360° angle controls the coolant directional valve, supporting a variable flow of coolant. It is used on mixing valves to ensure that the amount of heat is regulated particularly precisely. Position and error feedback is transmitted via the LIN interface.

In agriculture, the rotatory smart actuator for 360° angle is used during seed metering/singling, for example. During this process, the CIPOS® technology and a high torque enable precise and reliable position control. A flexible operating angle range and the “True Power” function up to an angle of 180° make for particularly precise positioning.

PRODUCT FEATURES

Application
The rotatory smart actuator for 360° angle can be used in a broad range of applications involving harsh environmental conditions. High torque and CIPOS® technology enable precise and reliable positioning.

Examples include:
- → Seed metering/singling
- → Delivery air/exhaust air flaps
- → Choke of the radiator grille
- → Valve control in the cooling circuit

Function
The rotatory smart actuator for 360° angle monitors the position of the output gear wheel and the integrated electronics continually calculate the position using an ASIC. The actuator offers the "True power on" function for angles under 180°, i.e. it enables direct startup without calibration. In operation, the actuator carries out controlled movement to the programmable "soft stops". The self-blocking transmission minimises current consumption (< 25 mA), which is required in order to maintain a defined position.

TECHNICAL DETAILS

Technical data*	
Rated voltage	13.5 V
Operating voltage	9 – 16 V
Operating temperature	-40 °C to +85 °C
Rated torque (13.5 V; RT)	60 Ncm
Max. torque (13.5 V; RT)	< 300 Ncm
Operating angle range	> 360° (< 180° true power on)
Protection class	IP 6K9K IP 6K7 (depending on category of mating connector)
Lifetime	Typically 250,000 cycles (1 cycle = 90 ° angle open – closed – open)
Control system	LIN 2.0 and PWM

* The technical data shown here represent the entire group of actuators. They vary depending on the product or variant.

Dimensional sketch

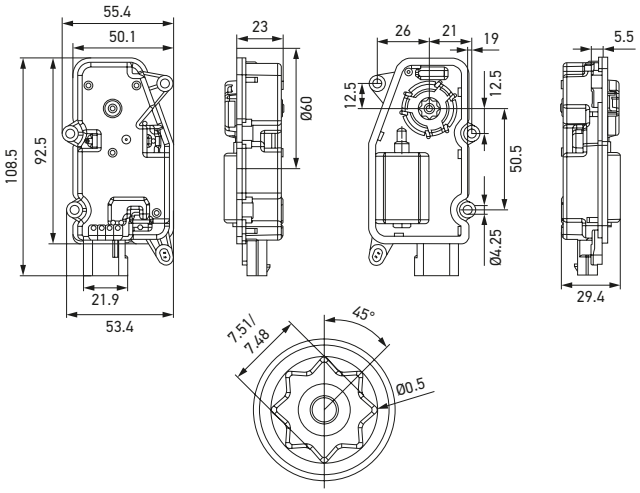

Pin assignment

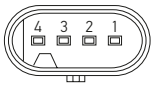

Pin 1: U_{Bat}
Pin 2: PWM Input
Pin 3: LIN/PWM Output
Pin 4: Ground

APPLICATION EXAMPLES

Seed metering/singling
CIPOS® technology and high torque enable precise and reliable positioning.

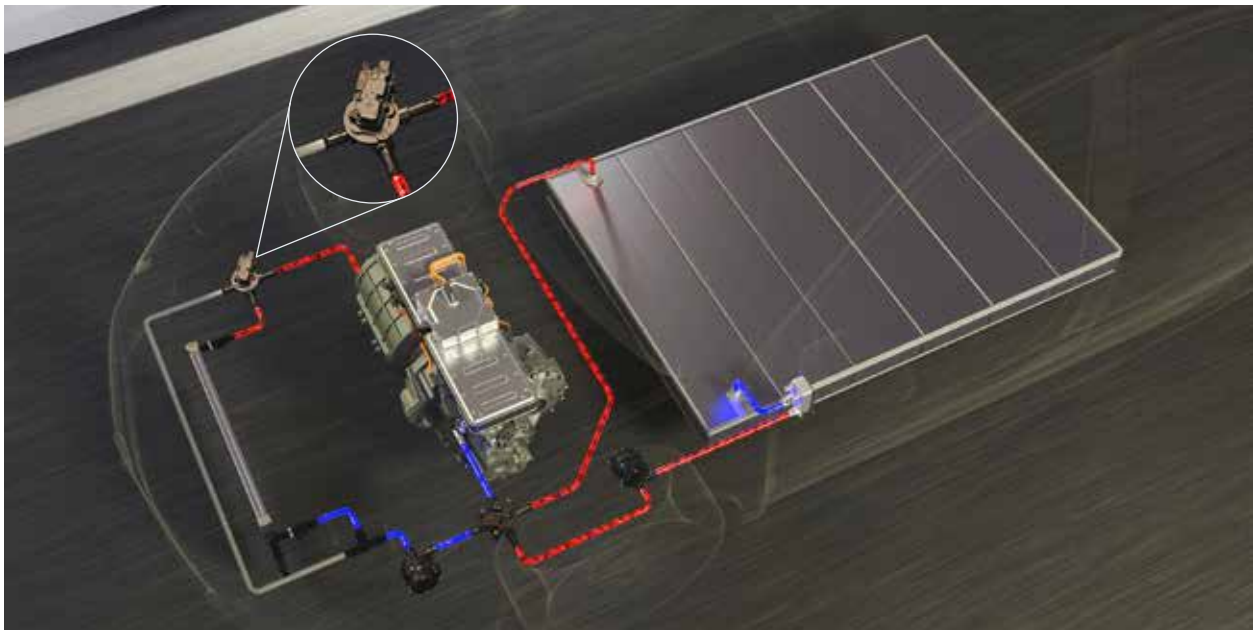

Cooling circuits in a wide range of vehicle segments
The rotatory smart actuator for 360° angle controls the coolant valve, supporting the variable flow of coolant by regulating the heat quantities particularly precisely.

PROGRAM OVERVIEW

Function	Voltage	Torque	Manual adjustment	Protection class	Part number
Electrical locking/unlocking & closing, electrical rotation right and left, with position feedback using CIPOS® technology	12 V	< 300 Ncm	No	IP 6K9K or IP 6K7*	**6NW 011 303-717**

* Depends on the connector classification.

© HELLA GmbH & Co. KGaA, Lippstadt J01489/03.22 Subject to technical and price modifications.