

# BRIEF INFORMATION

## RokBEAM

- High-performance LED work lamp with compact design
- Exceptional 60 g shock resistance and dimmable via PWM
- Built tough for maximum durability

## PRODUCT FEATURES

The RokBEAM from FORVIA HELLA sets new standards in construction and mining applications. Developed to meet the highest EMC and vibration requirements, this compact work lamp combines high performance with a robust, corrosion-resistant design.

Offering exceptional shock resistance of up to 60 g, the lamp is also dimmable via PWM. Its high-quality materials and coatings ensure long-lasting durability, and the reflector can be customised with laser-etched logos on request.

Despite its compact size, the RokBEAM delivers a high lumen output, combining efficiency with a long service life.

For a particularly striking appearance, the RokBEAM is also available in a Black Edition, offering the same technical performance in an attractive, modern design.

# TECHNICAL DETAILS

| Technical data | |
|---|---|
| Operating voltage range | Multi-voltage (9 – 32 V) |
| Rated voltage | 12 V and 24 V |
| Current consumption | **12 V**<br>Ø 2.7 A*/Ø 2.6 A* **ZERO**GLARE<br>**24 V**<br>Ø 1.2 A**/Ø 1,2 A** **ZERO**GLARE |
| Power consumption | **12 V**<br>Ø 35.8 W*, Ø 34.4 W* **ZERO**GLARE<br>**24 V**<br>Ø 33.4 W**,<br>Ø 32.2 W** **ZERO**GLARE |
| Light output (warm) | Up to 3,800 lm |
| Light source | LED |
| Colour temperature | 5,700 K |
| Material | Housing: die-cast aluminium<br>Cover lens: plastic |
| Weight | 625 g |
| Temperature range | -40 °C to +85 °C |
| Protection class | IP 6K9K, IP 6K8 |
| Approved | UN-R10, ADR / GGVSEB |
| Compliant | RCM, CISPR 25 Class 5 |
| Protection | Polarity reversal protection, overvoltage protection, overheating protection,<br>short circuit protection |
| Mounting | Upright and pendant mounting (except **ZERO**GLARE) |
| Connection | DEUTSCH DT connector 2-pin |

* Warm measured at 13.2 V after 30 minutes of operation.
** Warm measured at 28 V after 30 minutes of operation.

**Dimensional sketch**

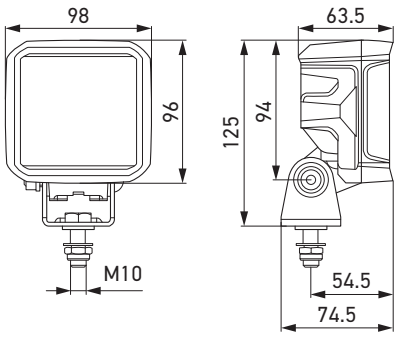

# LIGHT DISTRIBUTION

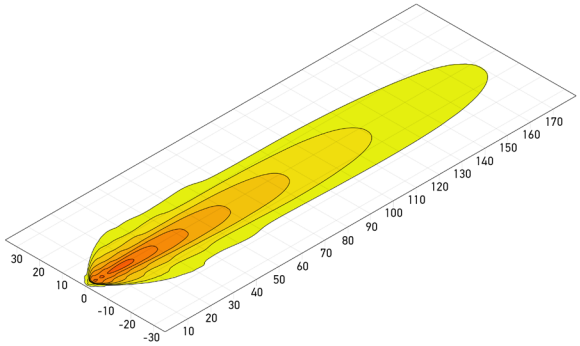


Long-range

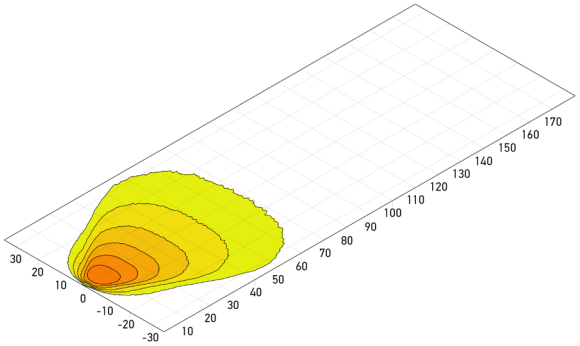


Close-range

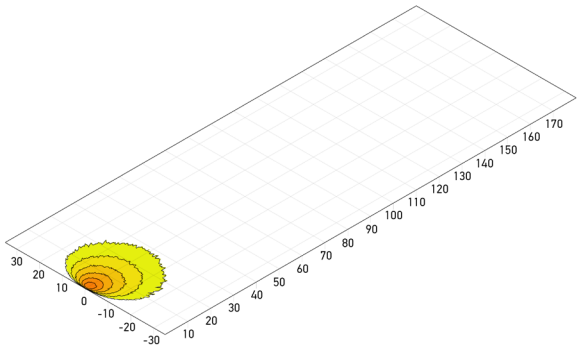


Diffuse flood

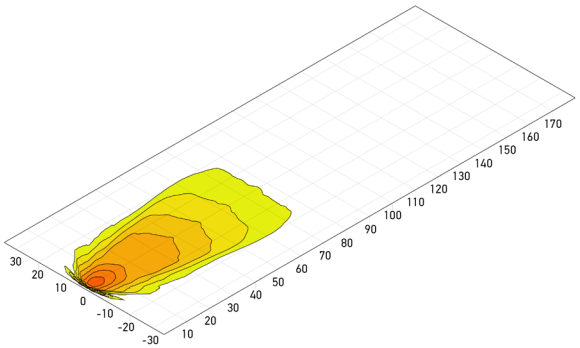


**ZERO**GLARE

lux >= 0 1 2 4 8 16 32 64

Mounting position: 2.5 m high at 8° (close-range illumination), 3° (long-range illumination and diffuse flood illumination) or 0° (**ZERO**GLARE illumination)

# PROGRAM OVERVIEW

| Product picture | Type of mounting | Variant | Part number |
|---|---|---|---|
|  | Upright/pendant | Close-range illumination | **1GA 996 384-001** |
|  | Upright/pendant | Long-range illumination | **1GA 996 384-011** |
|  | Upright/pendant | Diffuse flood illumination | **1GA 996 384-027** |
|  | Upright | **ZERO**GLARE illumination | **1GA 996 384-031** |
|  | Pendant | **ZERO**GLARE illumination | **1GA 996 384-047** |
|  | Upright/pendant | Close-range illumination, black | **1GA 996 384-201** |
|  | Upright/pendant | Long-range illumination, black | **1GA 996 384-211** |

© HELLA GmbH & Co. KGaA, Lippstadt J02456/10.26 Subject to technical and price modifications.