BRIEF INFORMATION

Ultra Beam LED Gen. 2 blue

- Work lamp with special, blue light, ideal for sprayer applications
- Specially coated plastic lens for improved chemical resistance
- Improved perception of the spray pattern in darkness
- Spot illumination for better light range

PRODUCT FEATURES

The Ultra Beam LED Gen. 2 blue produces a special blue light that makes fine spray pattern easily perceptible in the dark. The work lamp thus also enables accurate sprayer work at night. Other highlights include the plastic lens with special coating for improved chemical resistance and spot illumination, which uses a focused beam of light to ensure that all spray cones are clearly visible.

The Ultra Beam LED Gen. 2 blue is based on the world's best-selling work lamp series, which was expanded by an LED version in 2014. In the meantime, the second generation has been launched on the market, which is now being supplemented by a version for special applications.

The work lamp consumes only 12 watts. Integrated electronics safely protect it against reverse polarity. The unit provides constant brightness even at fluctuating operating voltages between 9 and 32 volts.

The work lamp's black aluminium housing has been equipped with cooling fins and a temperature sensor to protect the eight high-power LEDs from overheating. This once again significantly increases the lifetime of the LEDs, which means they may last up to 30 times longer than xenon gas discharge lamps.

TECHNICAL DETAILS

Technical data	
Operating voltage range	Multi-voltage (9 – 32 V)
Rated voltage	12 V and 24 V
Power consumption	12 W
Light source	LED
Colour temperature	Blue light (450 nm wavelength)
Material	Housing: die-cast aluminium Lens: plastic with special coating
Protection class	IP 6K8, IP 6K9K
Approved	ECE-R10
Protection	Polarity reversal protection, overvoltage protection
Mounting	Upright and pendant
Connection	DEUTSCH DT connector

Dimensional sketch

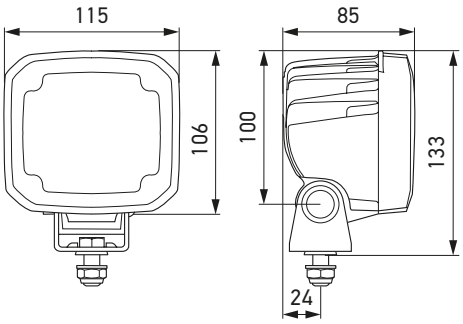

PROGRAM OVERVIEW

Illumination	Type of mounting	Connection	Part number
Spot illumination	Upright and pendant	DEUTSCH DT connector	**1GA 995 606-311**

LIGHT DISTRIBUTION

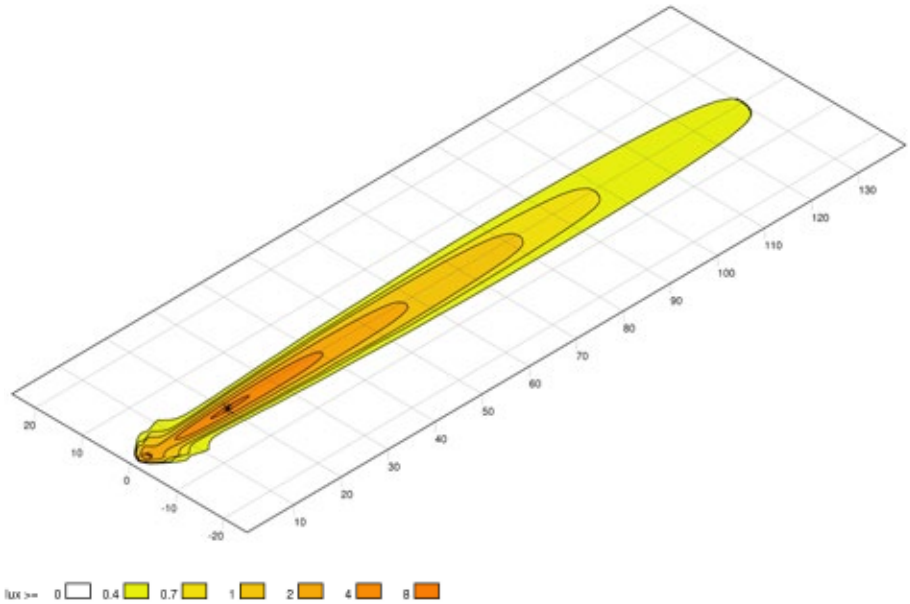

© HELLA GmbH & Co. KGaA, Lippstadt J02123/03.25 Subject to technical and price modifications.