PRODUCT INFORMATION
HALOGEN BULBS

- → Optimal balance between light output and durability
- → Excellent value for money
- → Designed to meet OEM specifications
- → SAE / ECE and INMETRO approved (when applicable)

PRODUCT FEATURES

HELLA Halogen bulbs are engineered to deliver dependable performance, safety, and durability across a wide range of vehicle applications. Offering original equipment quality, HELLA's halogen portfolio covers standard replacement, enhanced performance, extended service life, and specialized solutions for demanding driving conditions.

HELLA Standard Bulbs: HELLA standard halogen bulbs provide a quality of original equipment manufacturer and great value for your money. The optimal balance between performance and service life. With SAE / ECE and INMETRO approval (when applicable).

HELLA Performance Bulbs: Our bulbs are establishing new reference points for halogen lighting, making driving safer and more pleasant, providing a beam of light with greater intensity compared to HELLA Standard bulbs. The opaque silver lid offers an elegant look in the clear glass headlights

HELLA Long Life Bulbs: HELLA Long Life halogen bulbs have a long service life up to 2 times longer than HELLA standard bulbs and are more environmentally friendly, as they do not have to be replaced frequently. Provides an optimal value for your money and the best selection for frequent travelers.

HELLA Heavy Duty Bulbs: Double power of 24V produces the light by means of a single filament. Heavy-Duty bulbs offer more power, more safety, without dazzling traffic. The double power reduces costs by increasing the life of up to 100%. HELLA High Wattage bulbs: It offers more light, with double brightness compared to HELLA standard halogen bulbs and greater luminous efficiency, its Special filament guarantees safety and relaxed driving in off-road conditions. Note: Take into account that due to the high wattage it can generate on heating the wiring of the headlight.

HELLA Design bulbs: Our design bulbs meet special requirements regarding design and safety. The xenon-like effect makes whiter light the correct alternative for design-oriented drivers. Our range of products:

HELLA HALOGEN BULBS

Product Image / Dimensions	Part Number	Voltage	Wattage	Base	Shape	Luminous Flux (lumens)	Kelvin	Content	Packaging	DOT	ECE	INMETRO	Features
H1 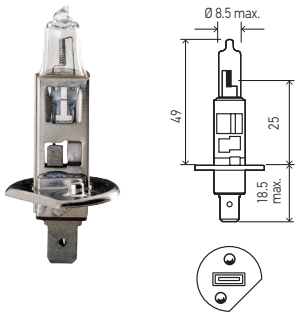	**H1**	12	55 W	P14.5s	T2.5	1550		1	C	■	■	■	Standard
	H1 24V	24	70 W	P14.5s	T2.5	1900		1	C		■	■	Standard
	H1P50	12	55 W	P14.5s	T2.5	1700		1	C	■	■	■	+ 50
	H1P50TB	12	55 W	P14.5s	T2.5	1700		2	B	■	■	■	+ 50
	H1 24V DP	24	70 W	P14.5s	T2.5	1900		1	C		■	■	Double Power
	H1 100W	12	100 W	P14.5s	T2.5	1850		1	C				High Wattage
	H1 130W	12	130 W	P14.5s	T2.5	2400		1	C				High Wattage
	H1 2.0TB	12	55 W	P14.5s	T2.5	1550	3600	2	B	■	■	■	High Performance 2.0
	H1LL	12	55 W	P14.5s	T2.5	1550		1	C	■	■	■	Long Life
	H1 YL	12	55 W	P14.5s	T2.5	1550	2900	2	B				Xtreme Yellow
	H71070227*	12	100 W	P14.5s	T2.5			2	P				Extreme White XB
	H71071242*	12	55 W	P14.5s	T2.5			2	P				Extreme White XB
	H71070642*	12	55 W	P14.5s	T2.5			2	P				Extreme Yellow XY
	H1TB	12	55 W	P14.5s	T2.5	1550		2	B	■	■	■	Standard
	H1SB	12	55 W	P14.5s	T2.5	1550		1	B	■	■	■	Standard
	H1 100WTB	12	100 W	P14.5s	T2.5	1850		2	B				High Wattage
	H1 24VSB	24	70 W	P14.5s	T2.5			1	B		■	■	Standard
	H1 24VTB	24	70 W	P14.5s	T2.5			2	B		■	■	Standard
	H1 24V DPSB	24	70 W	P14.5s	T2.5			1	B		■	■	Double Power
	LOW BEAM, HIGH BEAM, FOG LIGHT (WHERE APPLICABLE)												
H2 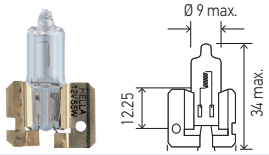	**H2**	12	55 W	X511	T3			1	C			■	Standard
	H2 100W	12	100 W	X511	T3			1	C				High Wattage
	LOW BEAM, HIGH BEAM, FOG LIGHT (WHERE APPLICABLE)												
H3 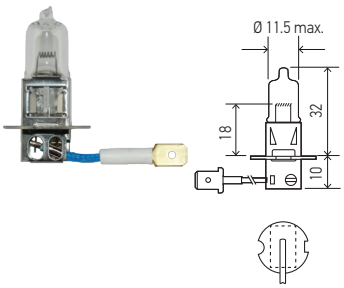	**H3**	12	55 W	PK22s	T3.25	1450		1	C	■	■	■	Standard
	H3 BULLET	12	55 W	PK22s	T3.25	1450		1	C				Standard
	H3 35W	12	35 W	PK22s	T3.25	750		1	C				Standard
	H3 24V	24	70 W	PK22s	T3.25	1750		1	C		■	■	Standard
	H3P50	12	55 W	PK22s	T3.25	1600		1	C				+ 50
	H3P50TB	12	55 W	PK22s	T3.25	1600		2	B				+ 50
	H3XE-100CB	12	100 W	PK22s	T3.25	1600	3600	1	C				Clear Blue/High W
	H3 24V DP	24	70 W	PK22s	T3.25			1	C		■	■	Double Power
	H3 24V HD	24	70 W	PK22s	T3.25	1750		1	C		■	■	Heavy-Duty
	H3HD	12	55 W	PK22s	T3.25	1450		1	C	■	■	■	Heavy-Duty
	H3 100W	12	100W	PK22s	T3.25	1850		1	C				High Wattage
	H3 130W	12	130 W	PK22s	T3.25	2600		1	C				High Wattage
	H3 24V 100W	24	100 W	PK22s	T3.25	2500		1	C				High Wattage
	H3 100WTB	12	100 W	PK22s	T3.25	1850		2	B				High Wattage
	H3 130WTB	12	130 W	PK22s	T3.25	2600		2	B				High Wattage
	H3 2.0TB	12	55 W	PK22s	T3.25	1450	3600	2	B	■	■	■	High Performance 2.0
	H3 YL	12	55 W	PK22s	T3.25	1450	2900	2	B				Xtreme Yellow
	H71070181*	12	100 W	PK22s	T3.25			2	P				Extreme White XB
	H71071312*	12	55 W	PK22s	T3.25			2	P				Extreme White XB
	H71070662*	12	55 W	PK22s	T3.25			2	P				Extreme Yellow XY
	H3TB	12	55 W	PK22s	T3.25	1450		2	B	■	■	■	Standard
	H3 35WTB	12	35 W	PK22s	T3.25	750		2	B				Standard
	H3SB	12	55 W	PK22s	T3.25	1450		1	B	■	■	■	Standard
	H3 35WSB	12	35 W	PK22s	T3.25	750		1	B				Standard
	H3 24V DPSB	24	70 W	PK22s	T3.25			1	B		■	■	Double Power
	H3 24V HDSB	24	70 W	PK22s	T3.25			1	B		■	■	Heavy-Duty
	H3 24VSB	24	70 W	PK22s	T3.25			1	B		■	■	Standard
	H3 24V 100WTB	24	100 W	PK22s	T3.25			2	B				High Wattage
	H3 24V HDTB	24	70 W	PK22s	T3.25			2	B		■	■	Heavy-Duty
	H3 24VTB	24	70 W	PK22s	T3.25			2	B		■	■	Standard
H3C 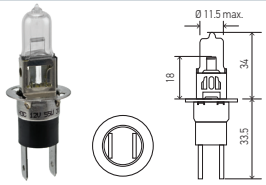	**H71071322***	12	55 W	P22d	T3.25			2	P				Extreme White XB
	H71071332*	12	80 W	P22d	T3.25			2	P				Extreme White XB
	H71071342*	12	55 W	P22d	T3.25			2	P				Extreme Yellow XY
	LOW BEAM, HIGH BEAM, FOG LIGHT (WHERE APPLICABLE)												

H3 BULLET

C = Box B = Blister Pack P = Plastic Case

* = OPTILUX Product Range ◇ = New Product

Measures in millimeters

H4

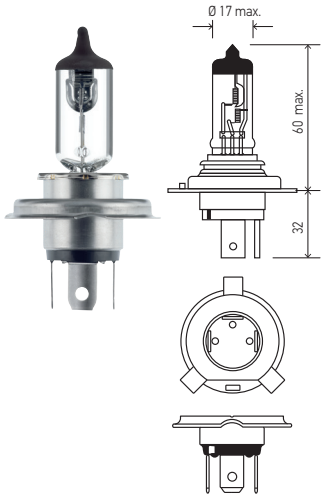

Product Image / Dimensions	Part Number	Voltage	Wattage	Base	Shape	Luminous Flux (lumens)	Kelvin	Content	Packaging	DOT	ECE	INMETRO	Features
	H4	12	60/55 W	P43t	T4.625	1650/1000	3200	1	C		■	■	Standard
	H4 24V	24	75/70 W	P43t	T4.625	1900/1200		1	C		■	■	Standard
	H4 35/35W	12	35/35 W	P43t	T4.625	825/525		1	C				Standard
	H4 45/45W	12	45/45 W	P43t	T4.625			1	C				Standard
	H4 P45T	12	60/55 W	P45t	T4.625	1650/1000		1	C				Standard
	H4P50	12	60/55 W	P43t	T4.625	1815/1100		1	C		■	■	+ 50
	H4P50TB	12	60/55 W	P43t	T4.625	1815/1100		2	B		■	■	+ 50
	H4XE-CB	12	60/55 W	P43t	T4.625	1650/1000	3600	1	C				Clear Blue
	H4XE-100CB	12	100/80 W	P43t	T4.625	2000/1350	3600	1	C				Clear Blue/High W
	H4 24V DP	24	75/70 W	P43t	T4.625	1900/1200		1	C		■	■	Double Power
	H4 24V HD	24	75/70 W	P43t	T4.625	1900/1200		1	C		■	■	Heavy-Duty
	H4 100/55W	12	100/55 W	P43t	T4.625	2400/1000		1	C				High Wattage
	H4 100/80W	12	100/80 W	P43t	T4.625			1	C				High Wattage
	H4 130/90W	12	130/90 W	P43t	T4.625	3200/1600		1	C				High Wattage
	H4 24V 100/90W	24	100/90 W	P43t	T4.625			1	C				High Wattage
	H4 100/55WTB	12	100/55 W	P43t	T4.625	2400/1000		2	B				High Wattage
	H4 100/80WTB	12	100/80 W	P43t	T4.625			2	B				High Wattage
	H4 130/90WTB	12	130/90 W	P43t	T4.625	3200/1600		2	B				High Wattage
	H4 100/80WSB	12	100/80 W	P43t	T4.625			1	B				High Wattage
	H4 24V LL	24	75/70 W	P43t	T4.625	1900/1200		1	C				Long Life
	H4 YL	12	60/55 W	P43t	T4.625	1650/1000	2800	2	P				Xtreme Yellow
	H71070201*	12	100/80 W	P43t	T4.625			2	P				Extreme White XB
	H71071352*	12	60/55 W	P43t	T4.625			2	P				Extreme White XB
	H71070682*	12	60/55 W	P43t	T4.625			2	P				Extreme Yellow XY
	H4TB	12	60/55 W	P43t	T4.625	1650/1000	3200	2	B		■	■	Standard
	H4 35/35WTB	12	35 /35 W	P43t	T4.625			2	B				Standard
	H4 45/45WTB	12	45 /45 W	P43t	T4.625			2	B				Standard
	H4 P45TTB	12	60/55 W	P45t	T4.625			2	B				Standard
	H4SB	12	60/55 W	P43t	T4.625	1650/1000	3200	1	B		■	■	Standard
	H4 35/35WSB	12	35 /35 W	P43t	T4.625			1	B				Standard
	H4 45/45WSB	12	45 /45 W	P43t	T4.625			1	B				Standard
	H4 P45TSB	12	60/55 W	P45t	T4.625	1650/1000		1	B				Standard
	H4 24V 100/90WTB	24	100/90 W	P43t	T4.625			2	B				High Wattage
	H4 24V HDTB	24	75/70 W	P43t	T4.625			2	B		■	■	Heavy-Duty
	H4 24VTB	24	75/70 W	P43t	T4.625			2	B		■	■	Standard
	H4 24V DPSB	24	75/70 W	P43t	T4.625			1	B		■	■	Double Power
	H4 24V HDSB	24	75/70 W	P43t	T4.625			1	B		■	■	Heavy-Duty
	H4 24VSB	24	75/70 W	P43t	T4.625			1	B		■	■	Standard

LOW BEAM, HIGH BEAM, FOG LIGHT (WHERE APPLICABLE)

H7

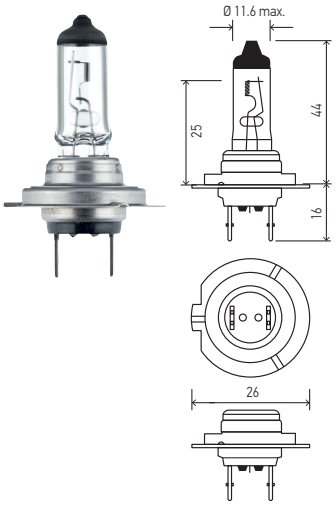

Product Image / Dimensions	Part Number	Voltage	Wattage	Base	Shape	Luminous Flux (lumens)	Kelvin	Content	Packaging	DOT	ECE	INMETRO	Features
	H7	12	55 W	PX26d	T4.625	1350		1	C	■	■	■	Standard
	H7 24V	24	70 W	PX26d	T4.625	1750		1	C		■	■	Standard
	H7P50	12	55 W	PX26d	T4.625	1560		1	C	■	■	■	+ 50
	H7P50TB	12	55 W	PX26d	T4.625	1560		2	B	■	■	■	+ 50
	H7 24V DP	24	70 W	PX26d	T4.625			1	C		■	■	Double Power
	H7 70W	12	70 W	PX26d	T4.625	1800		1	C				High Wattage
	H7 100W	12	100 W	PX26d	T4.625	2000		1	C				High Wattage
	H7 100WTB	12	100 W	PX26d	T4.625	2000		2	B				High Wattage
	H7 2.0TB	12	55 W	PX26d	T4.625	1500		2	P	■	■	■	High Performance 2.0
	H7 24V LL	24	70 W	PX26d	T4.625	1750		1	C		■	■	Long Life
	H7LL	12	55 W	PX26d	T4.625	1500	3700	1	C	■	■	■	Long Life
	H7 YL	12	55 W	PX26d	T4.625	1500		2	P				Xtreme Yellow
	H71070307*	12	100 W	PX26d	T4.625			2	P				Extreme White XB
	H71071362*	12	55 W	PX26d	T4.625			2	P				Extreme White XB
	H71070702*	12	55 W	PX26d	T4.625			2	P				Extreme Yellow XY
	H7TB	12	55 W	PX26d	T4.625	1350		2	B	■	■	■	Standard
	H7SB	12	55 W	PX26d	T4.625	1350		1	B	■	■	■	Standard
	H7 24VSB	24	70 W	PX26d	T4.625			1	B		■	■	Standard
	H7 24VTB	24	70 W	PX26d	T4.625			2	B		■	■	Standard
	H7 24V DPSB	24	70 W	PX26d	T4.625			1	B		■	■	Double Power

LOW BEAM, HIGH BEAM, FOG LIGHT (WHERE APPLICABLE)

Measures in millimeters

HELLA HALOGEN BULBS

Product Image / Dimensions	Part Number	Voltage	Wattage	Base	Shape	Luminous Flux (lumens)	Kelvin	Content	Packaging	DOT	ECE	INMETRO	Features
H8 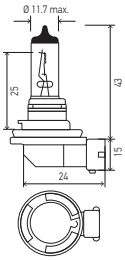	**H8**	12	35 W	PGJ19-1	T4	800		1	C	■	■		Standard
	H71070772*	12	55 W	PGJ19-1	T4			2	P				Extreme White XB
	H71071072*	12	35 W	PGJ19-1	T4			2	P				Extreme Yellow XY
	H71071372*	12	35 W	PGJ19-1	T4			2	P				Extreme White XB
	H8TB	12	35 W	PGJ19-1	T4	800		2	B	■	■		Standard
	H8SB	12	35 W	PGJ19-1	T4	800		1	B	■	■		Standard
H8B	**H8B**	12	35 W	PGJY19-1	T4	800		1	C		■		Standard
	LOW BEAM, HIGH BEAM, FOG LIGHT (WHERE APPLICABLE)												
H9 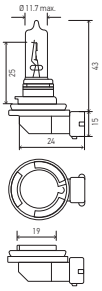	**H9**	12	65 W	PGJ19-5	T4	2100		1	C	■	■		Standard
	H9 2.0TB	12	65 W	PGJ19-5	T4	2100	3700	2	P	■	■		High Performance 2.0
	H71070792*	12	100 W	PGJ19-5	T4			2	P				Extreme White XB
	H71071092*	12	65 W	PGJ19-5	T4			2	P				Extreme Yellow XY
	H71071382*	12	65 W	PGJ19-5	T4			2	P				Extreme White XB
	H9TB	12	65 W	PGJ19-5	T4	2100		2	B	■	■		Standard
	H9SB	12	65 W	PGJ19-5	T4	2100		1	B				Standard
	H9 24VSB	24	80 W	PGJ19-5	T4			1	B				Standard
H9B	**H9 24VTB**	24	80 W	PGJ19-5	T4			2	B				Standard
	H9B	12	65 W	PGJY19-5	T4	2100		1	C		■		Standard
	HIGH BEAM, WORK LIGHT												
H10 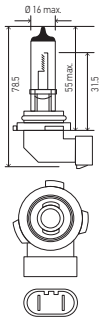	**H10**	12	45 W	PY20d	T4	850		1	C		■		Standard
	H71071012*	12	65 W	PY20d	T4			2	P				Extreme White XB
	H71071112*	12	42 W	PY20d	T4			2	P				Extreme Yellow XY
	H71071252*	12	42 W	PY20d	T4			2	P				Extreme White XB
	H10TB	12	45 W	PY20d	T4	850		2	B		■		Standard
	H10SB	12	45 W	PY20d	T4	850		1	B		■		Standard
	LOW BEAM												
H11 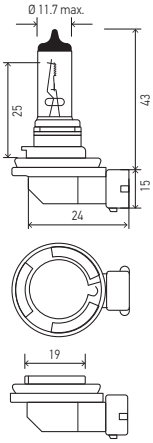	**H11**	12	55 W	PGJ19-2	T4	1350		1	C	■	■		Standard
	H11 24V	24	70 W	PGJ19-2	T4	1600		1	C		■		Standard
	H11P50	12	55 W	PGJ19-2	T4	1450		1	C	■	■		+ 50
	H11P50TB	12	55 W	PGJ19-2	T4	1450		2	B				+ 50
	H11XE-CB	12	55 W	PGJ19-2	T4	1350	3600	1	C				Clear Blue
	H11 24V DP	24	70 W	PGJ19-2	T4			1	C		■		Double Power
	H11 2.0TB	12	55 W	PGJ19-2	T4	1350	3700	2	P	■	■		High Performance 2.0
	H11LL	12	55 W	PGJ19-2	T4	1350		1	C	■	■		Long Life
	H11 YL	12	55 W	PGJ19-2	T4	1450	3000	2	B				Xtreme Yellow
	H71071032*	12	80 W	PGJ19-2	T4			2	P				Extreme White XB
	H71071132*	12	55 W	PGJ19-2	T4			2	P				Extreme Yellow XY
	H71071262*	12	55 W	PGJ19-2	T4			2	P				Extreme White XB
	H11TB	12	55 W	PGJ19-2	T4	1350		2	B	■	■		Standard
	H11SB	12	55 W	PGJ19-2	T4	1350		1	B	■	■		Standard
	H11 24V DPSB	24	70 W	PGJ19-2	T4			1	B		■		Double Power
	H11 24VSB	24	70 W	PGJ19-2	T4			1	B		■		Standard
	H11 24VTB	24	70 W	PGJ19-2	T4			2	B		■		Standard
	LOW BEAM												

C = Box B = Blister Pack P = Plastic Case

* = OPTILUX Product Range

Measures in millimeters

Product Image / Dimensions	Part Number	Voltage	Wattage	Base	Shape	Luminous Flux (lumens)	Kelvin	Content	Packaging	DOT	ECE	INMETRO	Features
H11B 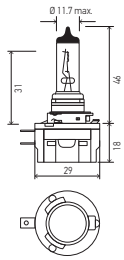	**H11B**	12	55 W	PGJY192	T3.25	1345	3100	1	C	■	■		Standard
	LOW BEAM, HIGH BEAM, FOG LIGHT (WHERE APPLICABLE)												
H12 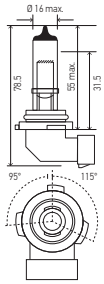	**H12**	12	55 W	PZ20d	T4	1050		1	C		■		Standard
	LOW BEAM, HIGH BEAM, FOG LIGHT (WHERE APPLICABLE)												
H13 9008 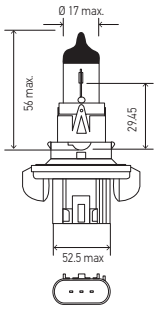	**H13**	12	60/55 W	P26.4t	T4	1700/1100		1	C	■	■		Standard
	H13P50	12	60/55 W	P26.4t	T4	1650/1100		1	C	■	■		+ 50
	H13P50TB	12	60/55 W	P26.4t	T4	1650/1100		2	B	■	■		+ 50
	H13 2.0TB	12	60/55 W	P26.4t	T4	1700/1100	3700	2	P	■	■		High Performance 2.0
	H13 YL	12	60/55 W	P26.4t	T4	1700/1100	3100	2	B				Xtreme Yellow
	H71071052*	12	100/80 W	P26.4t	T4			2	P				Extreme White XB
	H71071272*	12	60/55 W	P26.4t	T4			2	P				Extreme White XB
	H71071152*	12	60/55 W	P26.4t	T4			2	P				Extreme Yellow XY
	H13TB	12	60/55 W	P26.4t	T4	1700/1100		2	B	■	■		Standard
	H13SB*	12	60/55 W	P26.4t	T4	1700/1100		1	B	■	■		Standard
	LOW BEAM, HIGH BEAM, FOG LIGHT (WHERE APPLICABLE)												
H15 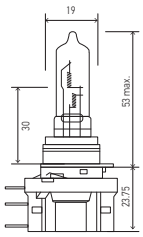	**H15**	12	15/55 W	PGJ23t-1	T4	1330	3100	1	C	■	■		Standard
	FOG LIGHT												
H16 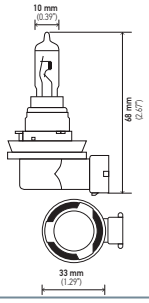	**H16**	12	19 W	PGJ19-3	T4		3700	1	C		■		Standard
	H16SB	12	19 W	PGJ19-3	T4		3700	1	B				Standard
	FOG LIGHT												
HS1 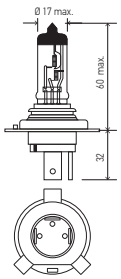	**HS1**	12	35/35 W	PX43t	T4.625			1	C		■		Standard
	HS1TB	12	35/35 W	PX43t	T4.625			2	B		■		Standard
	HS1SB	12	35/35 W	PX43t	T4.625			1	B		■		Standard
	LOW BEAM, HIGH BEAM, FOG LIGHT (WHERE APPLICABLE)												

Measures in millimeters

HELLA HALOGEN BULBS

Product Image / Dimensions	Part Number	Voltage	Wattage	Base	Shape	Luminous Flux (lumens)	Kelvin	Content	Packaging	DOT	ECE	INMETRO	Features
H20W **H5W** 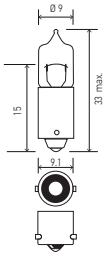	**H20W**	12	20 W	BA9s	T2.75	470		1	C				Standard
	H5W	12	5 W	BA9s	T2.75	80		1	C				Standard
	FLASHER LIGHT, REAR TURN SIGNAL, FRONT, SIDE AND TAIL LIGHT												
H6W 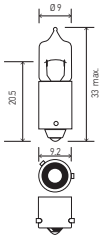	**H6W**	12	6 W	BAX9s	T2.75	125		1	C		■		Standard
	PARKING LIGHT												
H10W 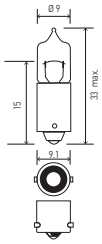	**H10W**	12	10 W	BA9s	T2.75			1	C			■	Standard
	PARKING LIGHT												
H21W 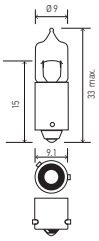	**H21W**	12	21 W	BAY9s	T2.75	600		1	C		■	■	Standard
	H21W 24V	24	21 W	BAY9s	T2.75			1	C		■	■	Standard
	FLASHER LIGHT, REAR TURN SIGNAL, FRONT, SIDE AND TAIL LIGHT												
880 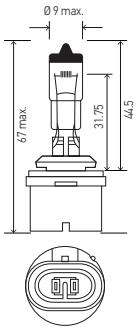	**880**	12	27 W	PG13	T3.25	540		1	C		■	■	Standard
	H71071172*	12	27 W	PG13	T3.25			2	P				Extreme Yellow XY
	H71071212*	12	32 W	PG13	T3.25			2	P				Extreme White XB
	880 YL	12	27 W	PG13	T3.25			2	B				Xtreme Yellow
	Many bulbs of the 800 series are physically interchangeable but not electrically. Serious damage and blinding by glare can result from misuse of the bulb, so it is important to use only the bulb that is specified for each application.												
	LOW BEAM, HIGH BEAM, FOG LIGHT (WHERE APPLICABLE)												
881,896, 898 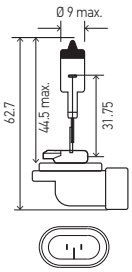	**881**	12	27 W	PGJ13	T3.25	540		1	C	■	■		Standard
	896	12	37.5 W	PGJ13	T3.25	940	3100	1	C				Standard
	898	12	37.5 W	PGJ13	T3.25	750	3100	1	C				Standard
	H71071182*	12	27 W	PGJ13	T3.25			2	P				Extreme Yellow XY
	H71071222*	12	32 W	PGJ13	T3.25			2	P				Extreme White XB
	Many bulbs of the 800 series are physically interchangeable but not electrically. Serious damage and blinding by glare can result from misuse of the bulb, so it is important to use only the bulb that is specified for each application.												
	LOW BEAM, FOG LIGHT (WHERE APPLICABLE)												

C = Box B = Blister Pack P = Plastic Case

* = OPTILUX Product Range

Measures in millimeters

Product Image / Dimensions	Part Number	Voltage	Wattage	Base	Shape	Luminous Flux (lumens)	Kelvin	Content	Packaging	DOT	ECE	INMETRO	Features
884, 885, 887, 890, 892													
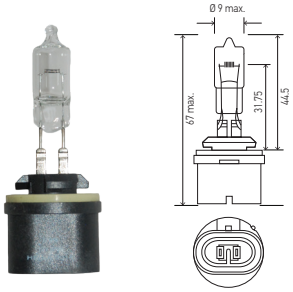	**884**	12	27 W	PG13	T3.25	540		1	C				Standard
	885	12	50 W	PG13	T3.25	1250		1	C				Standard
	887	12	50 W	PG13	T3.25	1190		1	C				Standard
	890	12	27 W	PG13	T3.25	540	1100	1	C				Standard
	892	12	16 W	PG13	T3.25	350		1	C				Standard
	Many bulbs of the 800 series are physically interchangeable but not electrically. Serious damage and blinding by glare can result from misuse of the bulb, so it is important to use only the bulb that is specified for each application.												
	LOW BEAM, FOG LIGHT (WHERE APPLICABLE)												
891													
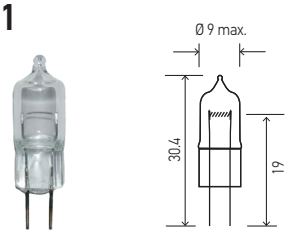	**891**	12	8 W	G4	T3.25	135	3100	1	C				Standard
	LOW BEAM, FOG LIGHT (WHERE APPLICABLE)												
893													
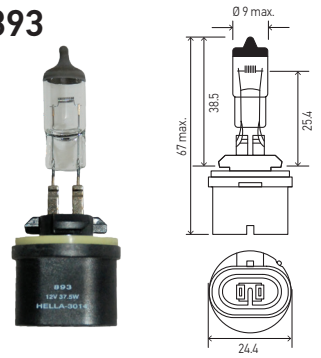	**893**	12	37.5 W	PG13	T3.25	940		1	C				Standard
	H71071192*	12	37.5 W	PG13	T3.25			2	P				Extreme Yellow XY
	H71071232*	12	37.5 W	PG13	T3.25			2	P				Extreme White XB
	Many bulbs of the 800 series are physically interchangeable but not electrically. Serious damage and blinding by glare can result from misuse of the bulb, so it is important to use only the bulb that is specified for each application.												
	LOW BEAM, FOG LIGHT (WHERE APPLICABLE)												
862, 886, 888, 889, 894													
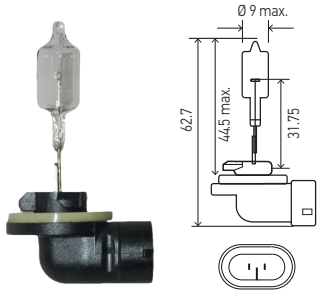	**862**	12	37.5 W	PGJ13	T3.25	750		1	C				Standard
	886	12	50 W	PGJ13	T3.25	1190		1	C				Standard
	888	12	50 W	PGJ13	T3.25	540		1	C				Standard
	889	12	27 W	PGJ13	T3.25	540		1	C				Standard
	889 YL	12	35 W	PGJ13	T3.25			2	B				Xtreme Yellow
	894	12	37.5 W	PGJ13	T3.25	940		1	C				Standard
	Many bulbs of the 800 series are physically interchangeable but not electrically. Serious damage and blinding by glare can result from misuse of the bulb, so it is important to use only the bulb that is specified for each application.												
	LOW BEAM, HIGH BEAM, FOG LIGHT (WHERE APPLICABLE)												
9003 HB2													
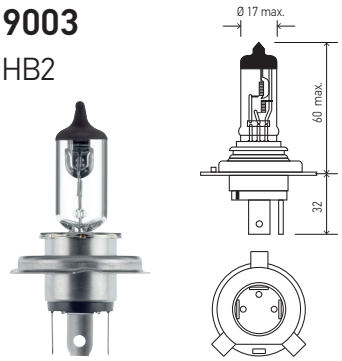	**9003**	12	60/55 W	P43t	T4.625	1500/910		1	C	■			Standard
	9003LL	12	60/55 W	P43t	T4.625	1500/910		1	C	■			Long Life
	9003 2.0TB	12	60/55 W	P43t	T4.625	1500/910	3600	2	P	■	■	■	High Performance 2.0
	9003TB	12	60/55 W	P43t	T4.625	1500/910		2	B	■			Standard
	9003SB	12	60/55 W	P43t	T4.625	1500/910		1	B	■			Standard
	LOW BEAM, HIGH BEAM, FOG LIGHT (WHERE APPLICABLE)												

Measures in millimeters

HELLA HALOGEN BULBS

Product Image / Dimensions	Part Number	Voltage	Wattage	Base	Shape	Luminous Flux (lumens)	Kelvin	Content	Packaging	DOT	ECE	INMETRO	Features
9004 HB1	**9004**	12	65/45 W	P29t	T4.625	1200/700		1	C	■		■	Standard
	9004P50	12	65/45 W	P29t	T4.625	1250/765		1	C	■		■	+ 50
	9004P50TB	12	65/45 W	P29t	T4.625	1250/765		2	B	■		■	+50
	9004XE-CB	12	65/45 W	P29t	T4.625	1100/700	3600	1	C				Clear Blue
	9004XE-100CB	12	100/80 W	P29t	T4.625	1250/1100	3600	1	C				Clear Blue/High W
	9004 100/80W	12	100/80 W	P29t	T4.625	1600/1300		1	C				High Wattage
	9004 100/80WSB	12	100/80 W	P29t	T4.625	1600/1300		2	B				High Wattage
	9004 2.0TB	12	65/45 W	P29t	T4.625	1200/700	3700	2	P	■		■	High Performance 2.0
	9004LL	12	65/45 W	P29t	T4.625	1200/700		1	C			■	Long Life
	9004 YL	12	65/45 W	P29t	T4.625	1200/700	2800	2	B				Xtreme Yellow
	H71071392*	12	65/45 W	P29t	T4.625			2	P	■			Extreme White XB
	H71070327*	12	100/80 W	P29t	T4.625			2	P				Extreme White XB
	H71070562*	12	65/45 W	P29t	T4.625			2	P				Extreme Yellow XY
	9004TB	12	65/45 W	P29t	T4.625	1200/700		2	B	■		■	Standard
	9004SB	12	65/45 W	P29t	T4.625	1200/700		2	B	■		■	Standard
	LOW BEAM, HIGH BEAM, FOG LIGHT (WHERE APPLICABLE)												
9005 HB3 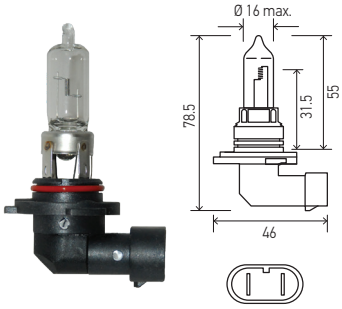	**9005**	12	65 W	P20d	T4	1860		1	C	■	■	■	Standard
	9005P50	12	65 W	P20d	T4	2000		1	C	■	■	■	+ 50
	9005P50TB	12	65 W	P20d	T4	2000		2	B	■	■	■	+ 50
	9005XE-100CB	12	100 W	P20d	T4	1530	3600	1	C				Clear Blue/High W
	9005 100W	12	100 W	P20d	T4	2200		1	C				High Wattage
	9005 100WSB	12	100 W	P20d	T4	2200		2	B				High Wattage
	9005 2.0TB	12	65 W	P20d	T4	1860	3700	2	P	■	■	■	High Performance 2.0
	9005LL	12	65 W	P20d	T4	1860		1	C	■	■	■	Long Life
	9005 YL	12	65 W	P20d	T4	1860	2900	2	B				Xtreme Yellow
	H71071402*	12	65 W	P20d	T4			2	P				Extreme White XB
	H71070347*	12	100 W	P20d	T4			2	P				Extreme White XB
	H71070582*	12	65 W	P20d	T4			2	P				Extreme Yellow XY
	9005TB	12	65 W	P20d	T4	1860		2	B	■	■	■	Standard
	9005SB	12	65 W	P20d	T4	1860		1	B	■	■	■	Standard
	LOW BEAM, HIGH BEAM, FOG LIGHT (WHERE APPLICABLE)												
9005XS HB3A 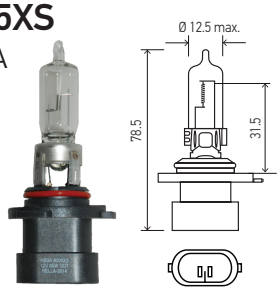	**9005XS**	12	65 W	P20d	T4	1860		1	C	■	■	■	Standard
	H71071412*	12	65 W	P20d	T4			2	P				Extreme White XB
	H71071422*	12	100 W	P20d	T4			2	P				Extreme White XB
	LOW BEAM, HIGH BEAM, FOG LIGHT (WHERE APPLICABLE)												
9006 HB4 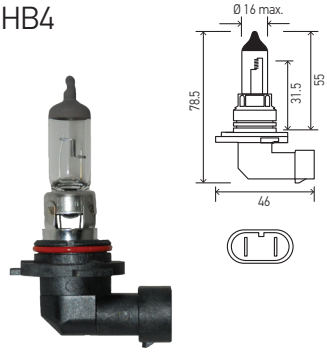	**9006**	12	55 W	P22d	T4	1095		1	C	■	■	■	Standard
	9006P50	12	55 W	P22d	T4	1200		1	C	■	■	■	+ 50
	9006P50TB	12	55 W	P22d	T4	1200		2	B	■	■	■	+ 50
	9006XE-80CB	12	80 W	P22d	T4	1300	3600	1	C				Clear Blue/High W
	9006 80W	12	80 W	P22d	T4	1650		1	C				High Wattage
	9006 80WSB	12	80 W	P22d	T4	1650		2	B				High Wattage
	9006 2.0TB	12	55 W	P22d	T4	1095	3700	2	P	■	■	■	High Performance 2.0
	9006LL	12	55 W	P22d	T4	1095		1	C	■	■	■	Long Life
	9006 YL	12	55 W	P22d	T4	1095	2900	2	B				Xtreme Yellow
	H71071432*	12	55 W	P22d	T4			2	P				Extreme White XB
	H71070367*	12	80 W	P22d	T4			2	P				Extreme White XB
	H71070602*	12	55 W	P22d	T4			2	P				Extreme Yellow XY
	9006TB	12	55 W	P22d	T4	1095		2	B	■	■	■	Standard
	9006SB	12	55 W	P22d	T4	1095		1	B	■	■	■	Standard
	LOW BEAM, HIGH BEAM, FOG LIGHT (WHERE APPLICABLE)												

C = Box B = Blister Pack P = Plastic Case

* = OPTILUX Product Range

Measures in millimeters

Product Image / Dimensions	Part Number	Voltage	Wattage	Base	Shape	Luminous Flux (lumens)	Kelvin	Content	Packaging	DOT	ECE	INMETRO	Features
9006XS HB4A 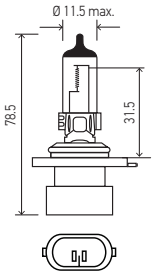	**9006XS**	12	55 W	P22d	T4	1095		1	C	■	■	■	Standard
	H71071442*	12	55 W	P22d	T4			2	P				Extreme White XB
	H71071452*	12	80 W	P22d	T4			2	P				Extreme White XB
	H71071462*	12	55 W	P22d	T4			2	P				Extreme Yellow XY
	LOW BEAM, HIGH BEAM, FOG LIGHT (WHERE APPLICABLE)												
9007 HB5 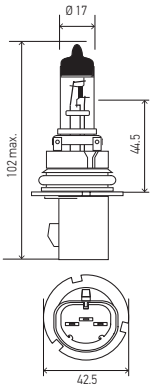	**9007**	12	65/55 W	PX29t	T4.625	1350/1000		1	C	■			Standard
	9007P50	12	65/55 W	PX29t	T4.625	1450/1100		1	C	■			+ 50
	9007P50TB	12	65/55 W	PX29t	T4.625	1450/1100		2	B	■			+ 50
	9007XE-CB	12	65/55 W	PX29t	T4.625	1350/1000	3700	1	C				Clear Blue
	9007 100/80W	12	100/80 W	PX29t	T4.625	1800/1500		1	C				High Wattage
	9007 100/80WSB	12	100/80 W	PX29t	T4.625	1800/1500		2	B	■			High Wattage
	9007 2.0TB	12	65/55 W	PX29t	T4.625	1350/1000	3700	2	P	■			High Performance 2.0
	9007LL	12	65/55 W	PX29t	T4.625	1350/1000		1	C				Long Life
	9007 YL	12	65/55 W	PX29t	T4.625	1350/1000	2800	2	B				Xtreme Yellow
	H71071472*	12	65/55 W	PX29t	T4.625			2	P				Extreme White XB
	H71070387*	12	100/80 W	PX29t	T4.625			2	P				Extreme White XB
	H71070622*	12	60/55 W	PX29t	T4.625			2	P				Extreme Yellow XY
	9007TB	12	60/55 W	PX29t	T4.625	1350/1000		2	B				Standard
	9007SB	12	60/55 W	PX29t	T4.625	1350/1000		1	B				Standard
	LOW BEAM, HIGH BEAM, FOG LIGHT (WHERE APPLICABLE)												
9012 HIR2 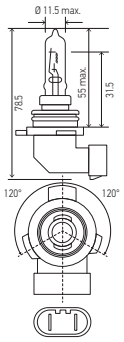	**9012LL**	12	55 W	PX22d	T4			1	C	■	■		Long Life
	LOW BEAM, HIGH BEAM												
9009S 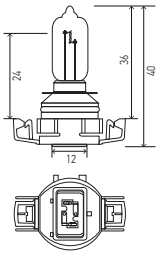	**H71071282***	12	35 W	PG20-3	T4			2	P				Extreme White XB
	H71071302*	12	35 W	PG20-3	T4			2	P				Extreme Yellow XY
	LOW BEAM, HIGH BEAM, FOG LIGHT (WHERE APPLICABLE)												
M5 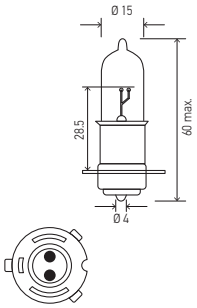	**M5 35/35W**	12	35/35 W	P15d-25-1		840/805		1	C				Standard
	M5 35/35WTB	12	35/35 W	P15d-25-1		840/805		2	B				Standard
	M5 35/35WSB	12	35/35 W	P15d-25-1		840/805		1	B				Standard
	M5 35/35W1	12	35/35 W	BA20D		840/805		1	C	■			Standard
	M5 25/25W	12	25/25 W	BA20D		540/540		1	C	■			Standard
	M5 25/25W1	12	25/25 W	P15D-25-1		540/540		1	C	■			Standard
	M5 18/18W	12	18/18 W	P15D-25-1		440/440		1	C	■			Standard
	M5 35/35W3	12	35/35 W	P15D-25-3		840/805		1	C	■			Standard
	M5 25/25W3	12	25/25 W	P15D-25-3		540/540		1	C	■			Standard
	LOW BEAM, HIGH BEAM, FOG LIGHT (WHERE APPLICABLE)												

Measures in millimeters

© HELLA GmbH & Co. KGaA, Lippstadt 01.2026 Subject to technical and price modifications.