BRIEF INFORMATION

Remote Control System

→ Unlocking cab doors / tank doors
→ Activating lights and worklights
→ Activating / deactivating an electronic immobiliser via transponder
→ Rugged design

PRODUCT FEATURES

APPLICATION

The remote control system has been developed specifically for use under harsh conditions (agricultural and construction machinery, commercial vehicles). This system gives the driver a convenient way of unlocking the cab door. The remote control can be equipped with one or two buttons, depending on the customer's requirements. An additional control unit capable of sending up to four output signals allows lamps to be activated such as worklights or beacons. HELLA's remote control system can easily be used to activate direction indicators and to release or lock covers, such as to engine compartments or toolboxes. The design can be customised on request, such as for incorporating customer-specific logos.

PRODUCT FEATURES

DESIGN AND FUNCTION

In terms of electronics, the remote control transmitter consists of the remote control transmitter electronics and a transponder. The transponder responsible for the immobiliser function is independent from the remote control transmitter electronics and can be set specific to a customer.

The remote control transmitter electronics are installed onto a double-sided printed circuit board. The printed circuit board contains the lock/unlock button and any other additional buttons (additional functions) in addition to the actual remote control transmitter electronics. Spring contact elements are used to provide the electrical connection between the printed circuit board and battery. Pressing a button transmits the remote control data provided with a rolling code and state-of-the-art 128-bit encryption. If the receiver control unit of the remote control has positively decrypted the data, it activates the output signal of the control unit.

The remote control system can be used in every European country and also in Russia, North America (USA + Canada) as well as in India without limitations. System remote control approvals outside Europe can be carried out in consultation with HELLA.

The remote control is equipped with a holder for a mechanical key bit. The mechanical key bit is not included in the scope of delivery for the remote control transmitter electronics. The key bit is usually mounted (by using a special mounting device) either at the customer's premises or at the manufacturer's.

Two remote keys are "taught-in" and assigned to the device during production of the remote receiver. Teaching additional remote keys in the field requires at least one functioning, taught-in key. For remote control with two buttons, up to 7 remote keys can be taught in. If the maximum number of remote keys has already been taught in, the last key place is overwritten when teaching in another key. If the remote control only has one button, no keys can be subsequently taught in.

FUNCTION OUTLINE

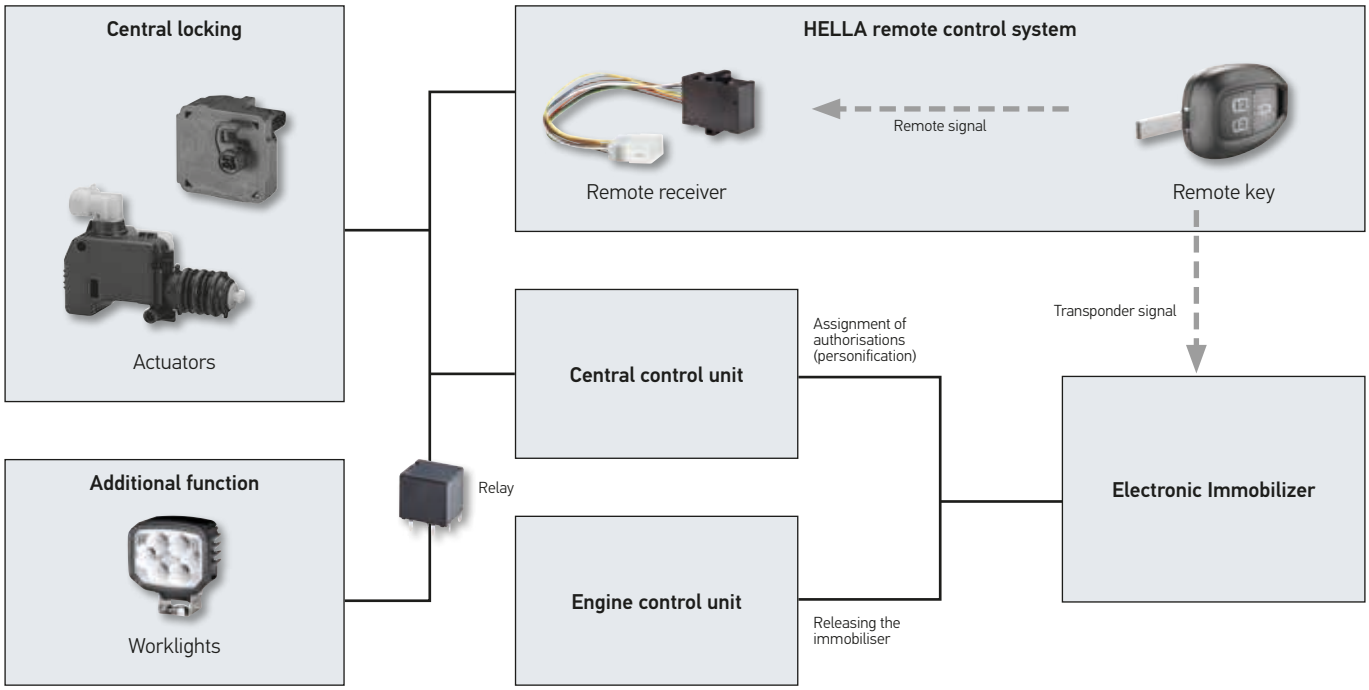

TECHNICAL DETAILS

Technical Data for Remote Control Transmitter	
Key bit – joining force	max. 350 N
Key bit – extraction force	> 180 N
Torque around the key roll axis	3 Nm
Torque around key width axis	4 Nm
Separation of housing parts, joining/separating force:	110 N (in new condition)
Housing cover	PA66+PA6I/X-GF50 and TPU
Housing base	PA6-GF30
Contact elements	X10CrNi 18-8
Customer logo:	PU logo, customised
Key field:	Hytrel black
Transmission frequency	434.42 MHz
Transmission power	30 µW ERP
Battery type[1)]	CR2032
Life of battery:	100,000 clicks (approx. 3 years)
Max. range[2)]	119 m
Min. range[2)]	51 m
Average Range[2)]	70.5 m
Operating temperature	- 20 °C to + 60 °C
Storage temperature	- 20 °C to + 60 °C
Protection class	IP 6K7 and IP X5

[1)] A battery is included in delivery of the remote control transmitter.
[2)] Ranges are dependent on installation position and interference factors. The values specified are representative and must be validated for each new application.

Technical Data for Remote Receiver	
Operating voltage	6 – 32 V
Power consumption	11 mA (signal output not activated)
Idling current	< 2 mA
Min. voltage:	6 V
Max. voltage:	58 V for 250 ms
Nominal voltage	12 / 24 V
Test voltage	27.6 ± 0.4 V
Overvoltage	36 V (at 40 °C, 1 hour)
Housing cover	Recycled PC
Housing base	Recycled PC
Male connector housing	PBT-GF20, V0
Operating temperature	- 40 °C to + 80 °C
Storage temperature	- 40 °C to + 90 °C
Protection class	IP 5K0
Length	51 mm
Width	45 mm
Height	21.5 mm
Mating connector[1)]	17848 000 000

[1)] This accessory is not included in the scope of delivery. It may be purchased directly from Lear.

Receiver Basic Version

Pin and configuration	Function	Description
1 Positive pole	Input	Power supply (+12/24 V)
2 GND	Input	Power supply (ground)
3 Door control module	Output	Low active (<300 mA), signal duration of 3.5 s if button 1 is pressed
4		Not assigned
5 Reserve	Output	High active (<300 mA), signal duration of 0.5 s if button 2 is pressed
6		Not assigned
7		Not assigned
8		Not assigned

Receiver Extended Variant

Pin and configuration	Function	Description
1 Positive pole	Input	Power supply (+12/24 V)
2 GND	Input	Power supply (ground)
Mode 3:	Input signal	Mode = low or mode = high (high at 70% of vehicle electrical system voltage)
4		Not assigned
5 Door 1	Output	High active (< 300 mA) when pressing button 1; mode = low: signal duration 3 s, mode = high: signal duration 0.5 s
6 Door 2	Output	High active (< 300 mA) when pressing button 2; mode = low: signal duration 3 s, mode = high: signal duration 0.5 s
7 Wake up function	Output	High active, (<300 mA), signal duration of 3.5 s
8 Reserve	Output	High active (<300 mA), signal duration of 3 s if button 2 is pressed

TECHNICAL DETAILS

Dimensional sketch

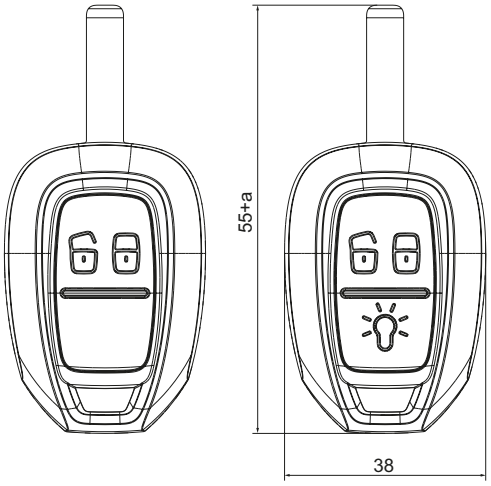

Receiver control unit

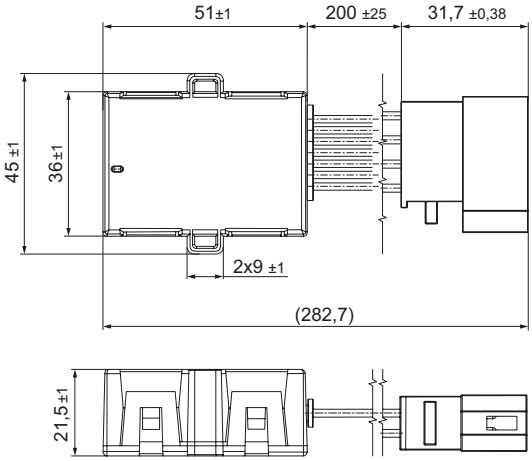

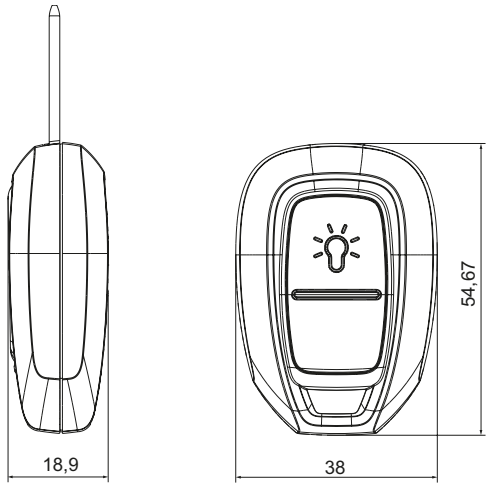

Interface to key bit
(a, b and c dimensions are customer-specific)

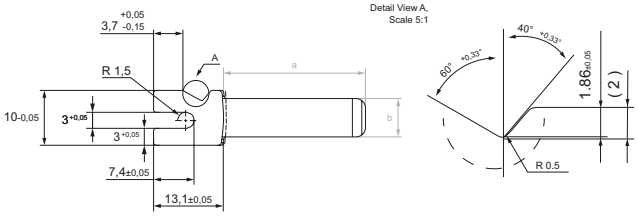

Dummy plug

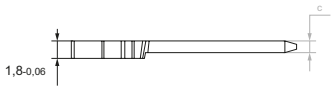

RANGE OVERVIEW

Two variants of the receiver control unit are available: The base variant and the extended variant. A customer-specific output signal characteristic can be implemented on request. A new article number is generated if a customer-specific logo needs to be provided. Two dummy plugs made of hard plastic are included with each device variant. This allows the remote control transmitter to be operated without a key bit as well.

Product photograph	Part number	Description
	5FA 012 485-817	2 remote control transmitters and extended variant receiver
	5FA 012 485-201	Spare key for 5FA 012 485-817
	On request	2 remote control transmitters with a button light symbol and extended variant receiver

Additional variants and configurations on request.

© HELLA GmbH & Co. KGaA, Lippstadt J00862/KB/01.19/0.6 Printed in Germany Subject to technical and price modifications.