LÂMPADAS

WWW.HELLA.COM/BULBS

CONTEÚDO

Prefácio 01

Qualidade testada 02

Fontes de iluminação 04

Comparação das fontes de iluminação 06

PORTFÓLIO: OS MELHORES PRODUTOS PARA TODAS AS NECESSIDADES 08

Avisos de segurança 10

Apresentação 11

A individualidade em destaque 12

Lâmpadas de incandescência HELLA de alta qualidade 14

Padrão: para maior rentabilidade económica 16

Lifetime: para uma vida útil mais longa 18

Performance: para mais luz 20

Design: para os mais exigentes 22

Xénon: para uma potência ainda maior 23

LED Retrofit: para mais design 24

Embalagens Blíster 12 V 26

Embalagens Blíster 24 V 31

Caixas de sortidos 34

Lâmpadas para veículos de duas rodas 36

Lâmpadas para a agricultura 40

Lâmpadas para veículos ligeiros de passageiros 46

Lâmpadas para camiões (Trucks) 112

VOLVO FH 09/05 →	H7 / D2S Xenon	H7	H7	P21W / PY21W / H21W	P21W	R5W	P21W	P21W	R5W	W5W	R5W	R5W
VOLVO FH II 05/12 →	H7	H1 / H7	H7	PY21W / P21W	P21W	R5W	P21W	P21W	LED	LED	LED	
VOLVO FH II 05/12 → BI-XENON	D1S	D1S / H7	H7	PY21W / P21W	P21W	R5W	P21W	P21W	LED	LED	LED	
VOLVO FH 12, FH 16 08/93 →	H4 / D2S Xenon	H4 / H3	H3	P21W	P21W	R5W	P21W	P21W	R5W	R5W	R5W	R5W
VOLVO FH 16 II 05/12 →	H7	H1 / H7	H7	PY21W / P21W	P21W	R5W	P21W	P21W	LED	LED	LED	
VOLVO FH 16 II 05/12 → BI-XENON	D1S	D1S / H7	H7	PY21W / P21W	P21W	R5W	P21W	P21W	LED	LED	LED	
VOLVO FH 16 08/93 →	H4	H3	H3	P21W	P21W	R5W	P21W	P21W	R5W	R5W	R5W	R5W
VOLVO FL 03/00 →	H1	H1	H3	P21W[1] / PY21W[2]	P21W	R5W	P21W	P21W	R5W	W5W	R5W	
VOLVO FL 6 09/85 → 03/00	H4	H4	H3	P21W	P21W	R5W	P21W	P21W	R5W	R5W	R5W	R5W
VOLVO FL 7 09/85 → 03/00	H4	H4	H3	P21W	P21W	R5W	P21W	P21W	R5W	R5W	R5W	R5W
VOLVO FL 10 09/85 → 09/98	H4	H4	H3	P21W	P21W	R5W	P21W	P21W	R5W	R5W	R5W	R5W
VOLVO FL 12 09/95 → 09/98	H4	H4	H3	P21W	P21W	R5W	P21W	P21W	R5W	R5W	R5W	R5W
VOLVO FLC 09/96 → 09/00	H1	H1	H1	P21W / P21/5W	P21W	R5W	P21W	P21W	R5W	T4W	R5W	R5W
VOLVO FL II 05/06 →	H4	H4	H3	P21W	P21W	R5W	P21W	P21W	R5W	R5W	R5W	R5W
VOLVO FL III 05/13 →	H4	H4	H11	P21W	P21W	R5W	P21W	P21W	R5W	LED	W5W	
VOLVO FM 09/05 →	H4 / D2S Xenon	H4	H3	P21W	P21W	R5W	P21W	P21W	R5W	R5W	R5W	R5W
VOLVO FM 7 08/98 → 12/01	H4	H4	H3	P21W / P21/5W	P21W	R5W	P21W	P21W	R5W	R5W	R5W	
VOLVO FM 9 12/01 → 09/05	H4 / D2S Xenon	H4	H3	P21W	P21W	R5W	P21W	P21W	R5W	R5W	R5W	R5W
VOLVO FM 12 08/98 → 09/05	H4 / D2S Xenon	H4	H3	P21W	P21W	R5W	P21W	P21W	R5W	R5W	R5W	R5W
VOLVO FMX 04/10 →	H1	H1	H7	P21W	P21W	R5W	P21W	P21W	R5W	W5W		
VOLVO FS 7 11/91 → 03/96	H4	H4		P21W	P21W	R5W	P21W	P21W	R5W	R5W	R5W	
VOLVO NH 12 05/99 →	H4	H4 / H1	H1	P21W / P21/5W	P21W	R5W	P21W	P21W	R5W	W5W	R5W	R5W
VOLKSWAGEN												
VW L 80 07/9512/00	H4	H4		P21W	P21W	R10W	P21W	P21W	R10W	T4W	R10W	

SÍMBOLOS

Médios	Luz dos travões
Máximos	Luz de presença traseira
Luz de nevoeiro	Iluminação do porta-luvas
Luz traseira de nevoeiro	Iluminação interna
Luz de circulação diurna	Iluminação da bagageira
Luz de presença	Iluminação da matrícula
PO Luz de posição	Iluminação do painel
Pisca frente	SM Luz de presença lateral
Pisca traseira	Luzes de estacionamento dianteiras
Pisca auxiliar	Luz de posição
Luz de marcha-atrás	Luz de contorno ou delimitadora
VLP	Embalagem
VLP e furgonetas – 12 V	V Tensão em Volt
VUT e autocarros – 24 V	W Potência em Watt
Trator	Casquilho da lâmpada de incandescência
Motociclos – 12 V	i Informação

Substituir as lâmpadas de incandescência sempre em pares em caso de conversão do sistema!

[1] Caixa de luz de pisca amarela
[2] Caixa de luz de pisca branca
[3] Faróis duplos
[4] Faróis padrão
[5] Farolim de 5 compartimentos
[6] Farolim de 7 compartimentos

IDENTIFICAÇÃO DE COR GRUPO DE PRODUTOS

- STANDARD
- LIFETIME
- PERFORMANCE
- DESIGN
- XÉNON
- LED RETROFIT

ABREVIATURAS / ESPECIFICAÇÕES

BL	Blue Light
CT	Chrome Top 2.0
HD	Heavy Duty
LL	Long Life
SLL	Super Long Life
Set	Conteúdo de 2 unidades

PREFÁCIO

CONTENTE-SE APENAS COM O MELHOR: LÂMPADAS DA HELLA.

Na qualidade de líder tecnológico na distribuição inteligente de luz, faróis de halogéneo, xénon e faróis LED e de parceiro de construtores automóveis internacionais de renome, a HELLA cumpre sempre os mais elevados requisitos e padrões de qualidade. Este padrão de exigência é igualmente aplicado no nosso programa das lâmpadas de incandescência: tecnologia de ponta em qualidade de ponta testada, verificada e sem compromissos. Em termos práticos isto significa uma excelente visão, graças a uma qualidade de luz otimizada e às mais baixas taxas de avaria, através de produtos robustos e de longa vida útil.

O programa cobre uma vasta área de aplicações: todos os tipos de veículos – por exemplo, VLP, VUT, veículos especiais e motociclos – faróis e lâmpadas, iluminação interna, luz clássica de halogéneo e luz de xénon. Todos os produtos com uma excelente relação preço/qualidade.

QUALIDADE TESTADA

Todas as lâmpadas de incandescência HELLA são sujeitas a uma verificação minuciosa. Os engenheiros da garantia de qualidade HELLA definiram para cada tipo de lâmpada de incandescência um perfil de requisitos inequívoco.

As lâmpadas de incandescência para faróis são, por exemplo, testadas pelos nossos engenheiros relativamente às características de distribuição da luz. Nestes ensaios são utilizados os mais modernos equipamentos de medição luminosa.

Teste de aderência do esmalte segundo FAKRA (Fachkreis Automobil), testes de vibração e de choque segundo IEC, medições geométricas, medições do fluxo luminoso e de potência, bem como testes da vida útil garantem o fornecimento de produtos com qualidade perfeita para o comércio grossista e oficinas.

A garantia de qualidade é um tema fundamental na Hella
Para que esteja satisfeito e tenha clientes satisfeitos. Por este motivo, os engenheiros responsáveis pela garantia de qualidade HELLA testam minuciosamente as nossas lâmpadas de incandescência assegurando elevados padrões de qualidade.

Com estes testes minuciosos e o nosso Know-how na qualidade de perito de luz OE, pode ter a certeza que garantimos uma elevadíssima qualidade.

Consequência deste controlo de qualidade coerente
Desde há muitos anos os fabricantes automóveis de renome apostam nas nossas inovações tecnológicas e confiam na competência, experiência e qualidade HELLA.

Medição geométrica
A geometria do filamento incandescente é testada num projetor de medição - segundo as normas definidas pela norma IEC 60810. O filamento incandescente deve ter dentro da lâmpada de incandescência a dimensão e posição definidas na norma. Apenas desta forma é atingida a potência luminosa otimizada e é prevenido que os outros ocupantes da via sejam ofuscados.

Teste de vibração e de choque
Neste teste, as lâmpadas de incandescência e, em particular, os filamentos incandescentes são testados numa plataforma vibratória eletrodinâmica.

Teste de aderência do esmalte
Numa câmara climática é testada a aderência da pintura nas ampolas de vidro lacado com diferentes temperaturas e humidade no ar – como, por exemplo, PY21W. A aderência correta da pintura das ampolas de vidro assegura que, por exemplo, a luz de pisca amarela seja garantida durante toda a vida útil da lâmpada.

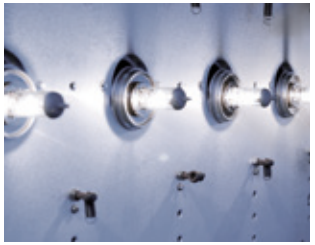

Teste da vida útil
Em testes exigentes é comprovada a elevada fiabilidade das lâmpadas de incandescência HELLA, durante um longo período.

Medição do fluxo luminoso
Na esfera de Ulbricht e no goniómetro são determinados os fluxos luminosos e as intensidades luminosas das lâmpadas de incandescência HELLA. Desta forma é assegurada máxima performance das lâmpadas de incandescência.

Estes testes e medições são a base da nossa qualidade testada e comprovada.

FONTES DE ILUMINAÇÃO

Boa visibilidade é o melhor critério para a segurança na estrada. Contudo, esta pode ser influenciada negativamente por diversas influências como, por exemplo, crepúsculo, condições climatéricas adversas, vidro para-brisas sujo ou similares. O risco de um acidente é muito elevado nestas condições.

O aumento do tráfego das estradas é igualmente um fator de aumento do risco de acidente. Para superar estes desafios da melhor forma possível, trabalhamos continuamente no aperfeiçoamento de sistemas de iluminação existentes e no desenvolvimento de novos sistemas de iluminação técnicos.

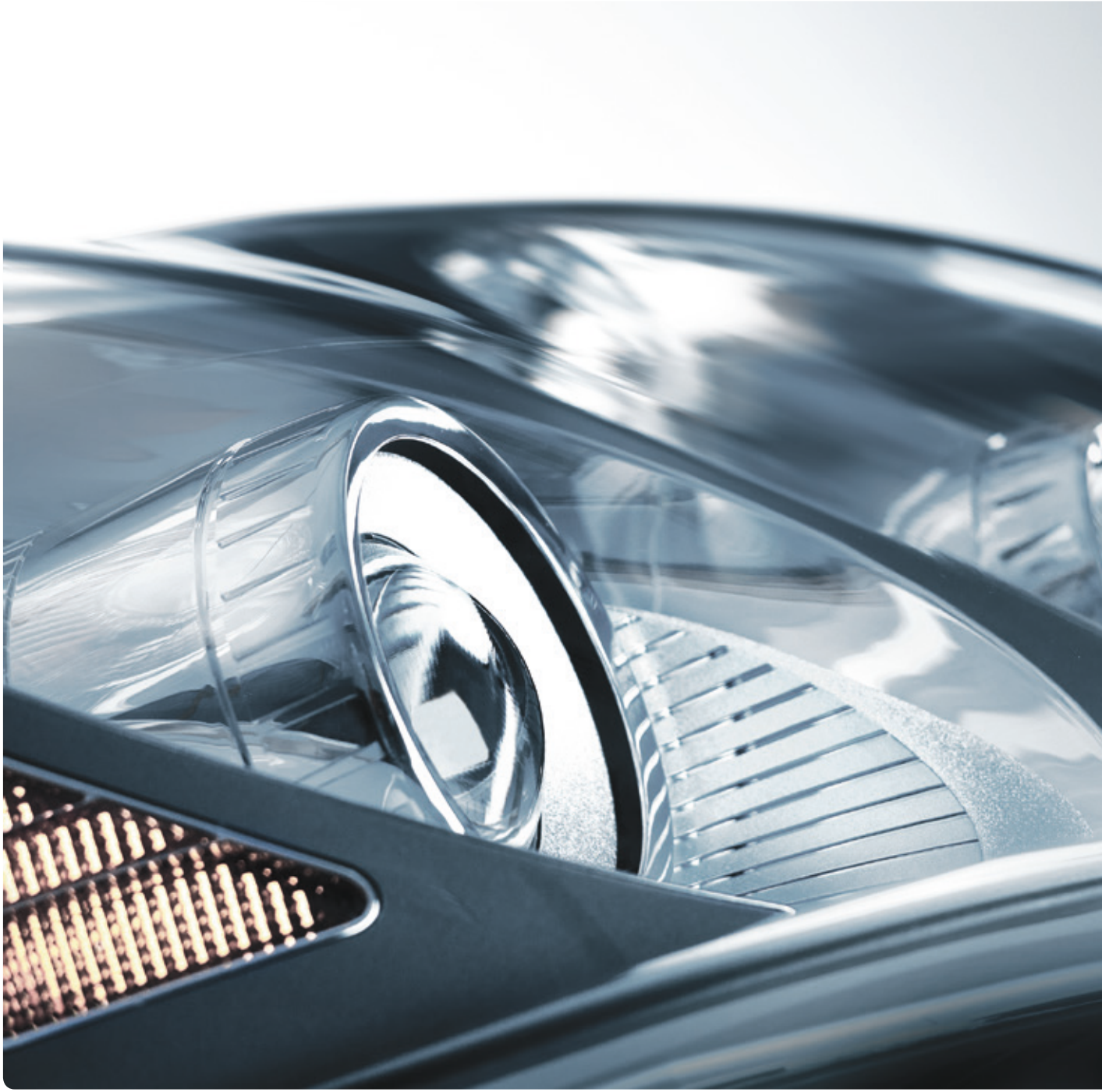

A seguir são descritos os principais termos e conceitos da luminotecnia e as respetivas unidades de medida para lâmpadas e a medição da luz.

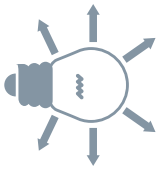

Fluxo luminoso Φ
Unidade: Lúmen [lm]
Por fluxo luminoso F designa-se toda a potência luminosa que é irradiada por uma fonte de luz.

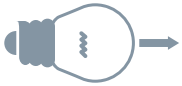

Intensidade luminosa I
Unidade: Candela [cd]
É parte do fluxo luminoso que é irradiado numa determinada direção.

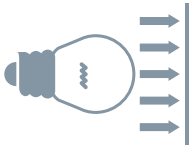

Iluminância E
Unidade: Lux [lx]
A iluminância E descreve a relação entre o fluxo luminoso e a superfície iluminada. A iluminância é de 1 lx se um fluxo luminoso de 1 lm incidir sobre uma superfície de 1 m^2.

Luminância L
Unidade: Candela por metro quadrado [cd/m2]
A luminância L descreve o modo de perceção do olho humano da claridade numa superfície luminosa ou iluminada.

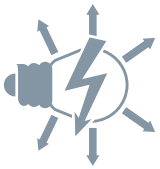

Eficiência luminosa η
Unidade: Lúmen por Watt [lm/W]
A eficiência luminosa η define o grau de eficiência com o qual a energia elétrica absorvida é transformada em luz.

Fontes de iluminação
As fontes de luz são irradiadores de temperatura que produzem luz através de energia térmica. Quanto mais intenso for o aquecimento de uma fonte de luz, maior é a intensidade luminosa.

COMPARAÇÃO DAS FONTES DE ILUMINAÇÃO

LÂMPADA DE HALOGÉNEO H4

As lâmpadas de halogéneo são irradiadores de temperatura que transformam energia térmica em luz. O filamento fica incandescente sob tensão e produz luz.

O grau de eficiência de uma lâmpada de halogéneo padrão é de aprox. 8 %. Cerca de 92 % da energia perde-se pela dissipação de calor.

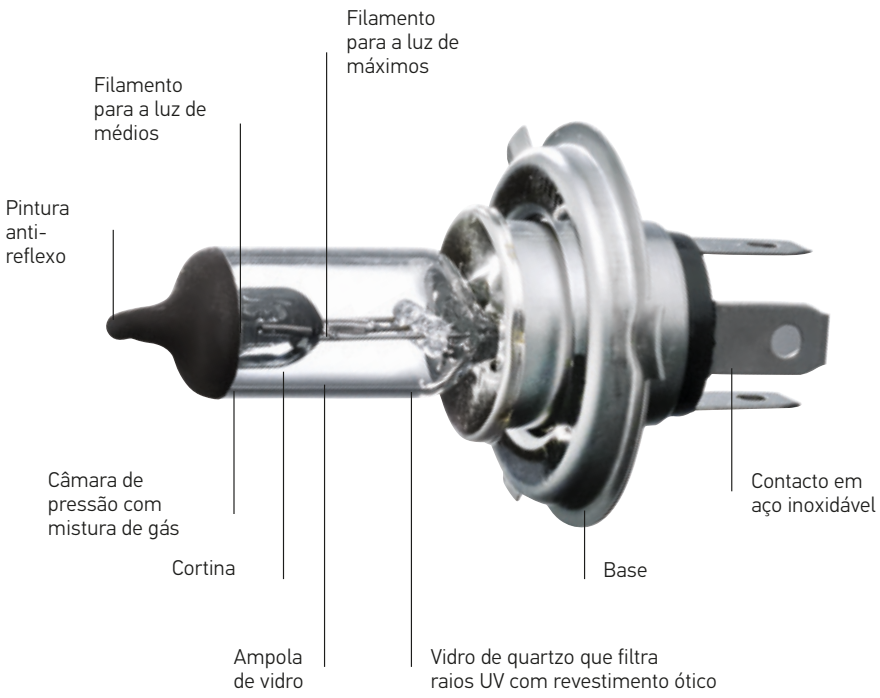

Distribuição luminosa e temperatura da cor típica de um farol com lâmpadas de halogéneo.

LÂMPADA DE DESCARGA DE GÁS D2R

Devido ao enchimento de gás de xénon, as lâmpadas de descarga de gás também são frequentemente designadas por lâmpadas de xénon. Um balastro produz uma alta tensão que provoca uma ignição elétrica do gás na câmara de descarga - um arco elétrico muito claro. O grau de eficiência de uma lâmpada de descarga de gás é cerca de 3,5 mais alto do que o de uma lâmpada de halogéneo (28 % de irradiação luminosa). Devido à maior eficiência luminosa, as lâmpadas de descarga de gás produzem mais luz, mas consomem a mesma energia que lâmpadas de halogéneo. Se ambas tiverem a mesma dimensão, a lâmpada de descarga de gás terá portanto uma distribuição de luz mais intensa.

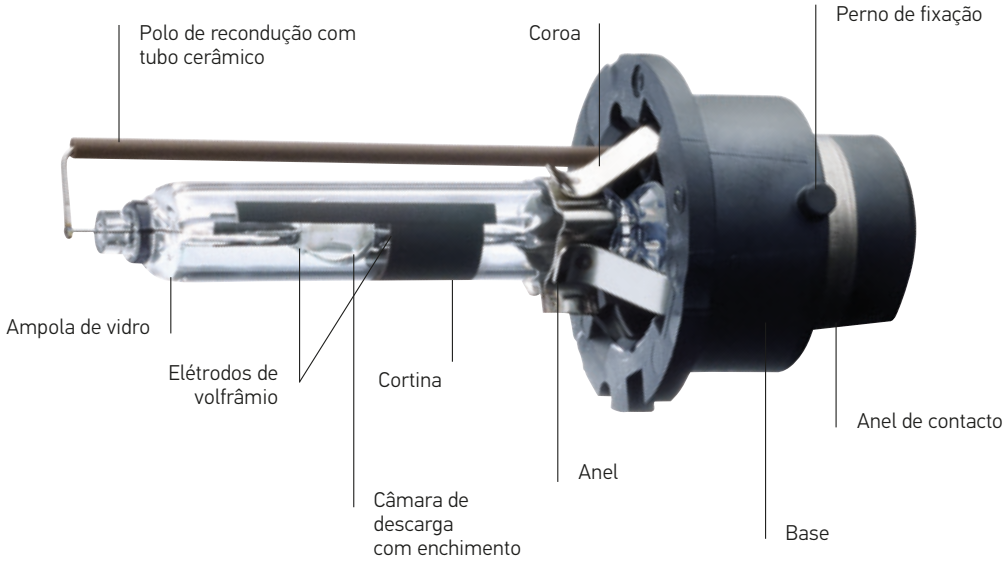

Distribuição luminosa e temperatura da cor típica de um farol com lâmpadas de descarga de gás.

PORTFÓLIO: OS MELHORES PRODUTOS PARA TODAS AS NECESSIDADES

ENCONTRE A LÂMPADA CERTA PARA AS SUAS NECESSIDADES

STANDARD: as lâmpadas de baixo custo para todos os requisitos padrão com uma excelente eficiência luminosa, fiabilidade, longa vida útil e excelente relação preço/qualidade.

LIFETIME: a construção especial das lâmpadas LONGLIFE e DOUBLEPOWER é ideal para motoristas ou profissionais que viajam muito e garante uma elevada fiabilidade aliada a uma vida útil mais elevada*. As lâmpadas SUPER LONG LIFE são novas no portfólio e têm uma vida útil até 3x mais longa*.

DESIGN: com o moderno efeito xénon, o modelo BLUELIGHT é a alternativa para o condutor com gosto pelo design. A luz azul-branca oferece uma melhor iluminação da faixa de rodagem, maior conforto e segurança.

PERFORMANCE: uma vertente económica da categoria Performance são as lâmpadas PERFORMANCE +30 e +50. Estas projetam mais luz* sobre a faixa de rodagem e oferecem uma melhor visibilidade ao condutor exigente.

Com até 120% mais luz* e um feixe luminoso 50m mais comprido*, as lâmpadas +120 estabelecem novos padrões no segmento da iluminação a halogéneo e oferecem ao condutor uma maior segurança e menor fadiga, graças a uma luz mais branca*.

O novo modelo CHROME TOP 2.0** destaca-se por uma capa cromada refletora, produz uma luz mais branca* e oferece até 100 % mais visibilidade na estrada.

TODAS AS LÂMPADAS DE INCANDESCÊNCIA HELLA FORAM TESTADAS SEGUNDO E E CERTIFICADAS SEGUNDO ECE R37

De acordo com a legislação em vigor, não são permitidas lâmpadas de halogéneo com uma potência mais elevada. As lâmpadas de halogéneo HELLA Performance oferecem uma eficiência luminosa máxima com homologação ECE.

QUAL É O SEU TIPO?

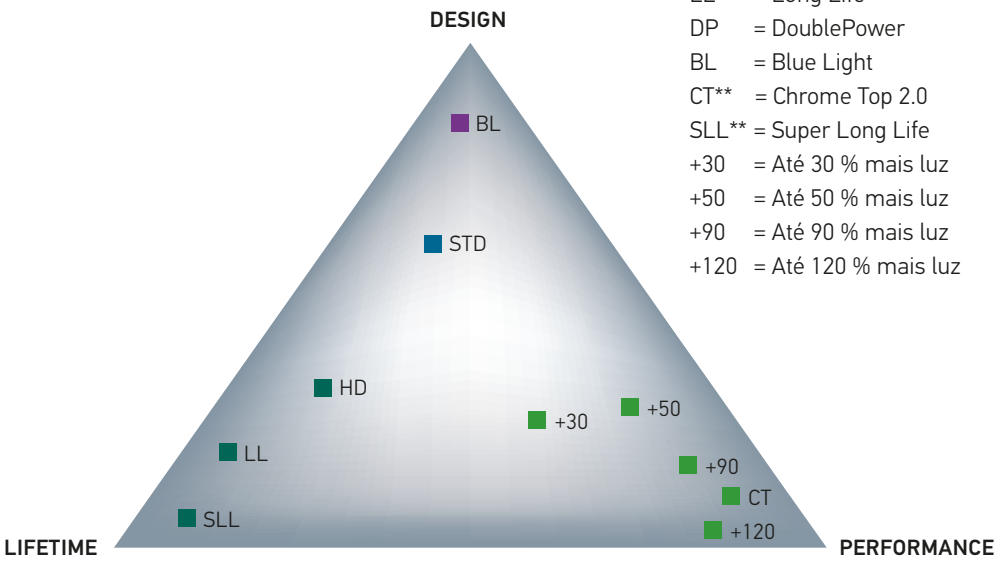

STD = Standard
HD = Heavy Duty
LL = Long Life
DP = DoublePower
BL = Blue Light
CT** = Chrome Top 2.0
SLL** = Super Long Life
+30 = Até 30 % mais luz
+50 = Até 50 % mais luz
+90 = Até 90 % mais luz
+120 = Até 120 % mais luz

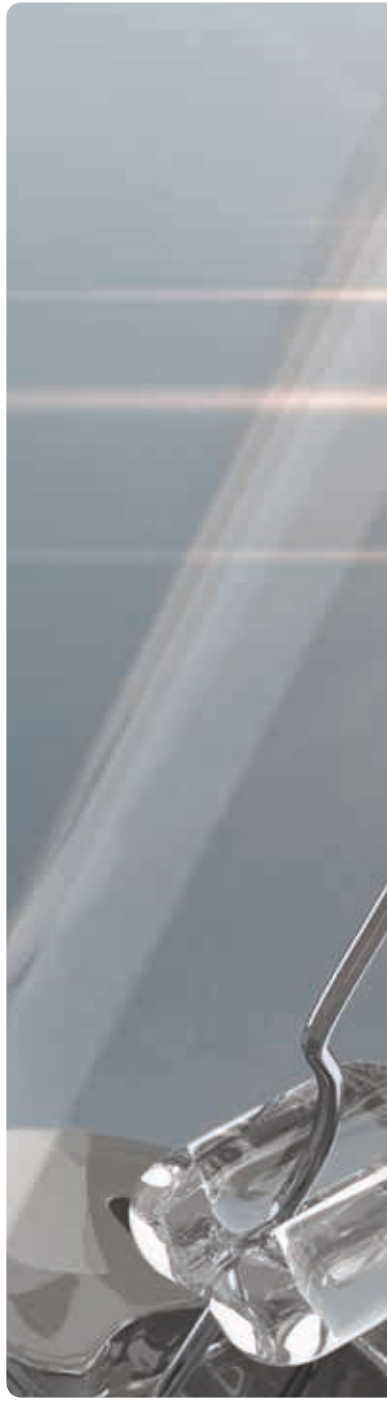

* Em comparação com as lâmpadas de halogéneo padrão
** Novo no portfólio

ESPECTRO VISÍVEL DA COR COM TEMPERATURAS TÍPICAS DA COR LUMINOSA

A temperatura da cor luminosa das lâmpadas é medida em Kelvin (símbolo K). Temperaturas de cor superiores a 4.000K são designadas por cores frias (branca/azulada) e temperaturas mais baixas (amareladas ou avermelhadas) são designadas por cores quentes.

Quanto mais alta for a temperatura da cor de uma fonte luminosa, maior é o teor azul do espectro visível da cor (ver figura). Uma lâmpada de incandescência branca tem uma temperatura da cor branca quente de aprox. 2700 K. Na figura seguinte é exibido o espetro das temperaturas de cor.

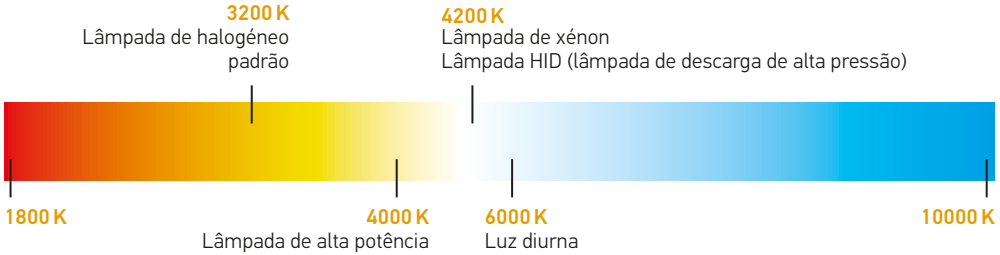

AVISOS DE SEGURANÇA

SUBSTITUIÇÃO DE UMA LÂMPADA

Durante a montagem de uma lâmpada nova deve ter-se em atenção para não tocar na ampola, visto que as impressões digitais são "queimadas" e provocam turvações.

As lâmpadas de incandescência padrão e as lâmpadas de halogéneo não têm quaisquer substâncias nocivas para o meio ambiente e podem ser eliminadas no lixo doméstico

Consulte a legislação local em vigor para encaminhar as lâmpadas usadas para a reciclagem

A HELLA recomenda que sejam substituídas as duas lâmpadas se uma queimar

APRESENTAÇÃO

CHROME TOP 2.0

O novo modelo Chrome Top 2.0 combina o design com a eficiência: a capa cromada atribui um aspeto elegante ao farol transparente. Com mais claridade* e um feixe luminoso até 50 m mais comprido*, a lâmpada de incandescência oferece até mais 100 % de visibilidade da estr ada. A luz mais branca é produzida através de um método de revestimento especial.

SUPER LONG LIFE

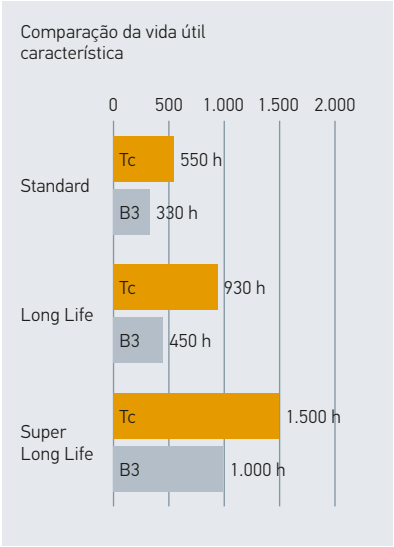

A lâmpada ideal para condutores profissionais ou que viajam muito: a nova Super Long Life da HELLA. Uma vida útil até 3x mais longa* com excelente relação preço/qualidade, visto que a frequência de substituição das lâmpadas é muito mais reduzida.

B3
Tempo em horas após o qual, pelo menos, 97 % das lâmpadas testadas ainda funcionam.

Tc
Tempo em horas após o qual, pelo menos, 36,8 % das lâmpadas testadas ainda funcionam. Tc, também designado por "valor Weibull", é uma unidade utilizada para definir a vida útil das lâmpadas de incandescência e para as comparar entre si.

* Em comparação com as lâmpadas de halogéneo padrão

A INDIVIDUALIDADE EM DESTAQUE

STANDARD

As lâmpadas de halogéneo padrão HELLA oferecem qualidade OE com uma excelente relação preço/qualidade.

BLUE LIGHT

Com o moderno efeito xénon, o modelo Blue Light é a alternativa para o condutor com gosto pelo design. A luz branca azulada melhora ainda os níveis de concentração e consequentemente um maior conforto de condução.

A capa mate prateada oferece um visual elegante em faróis transparentes.

Disponível nas versões: H1, H3, H4, H7, H8, H9, H11, W5W

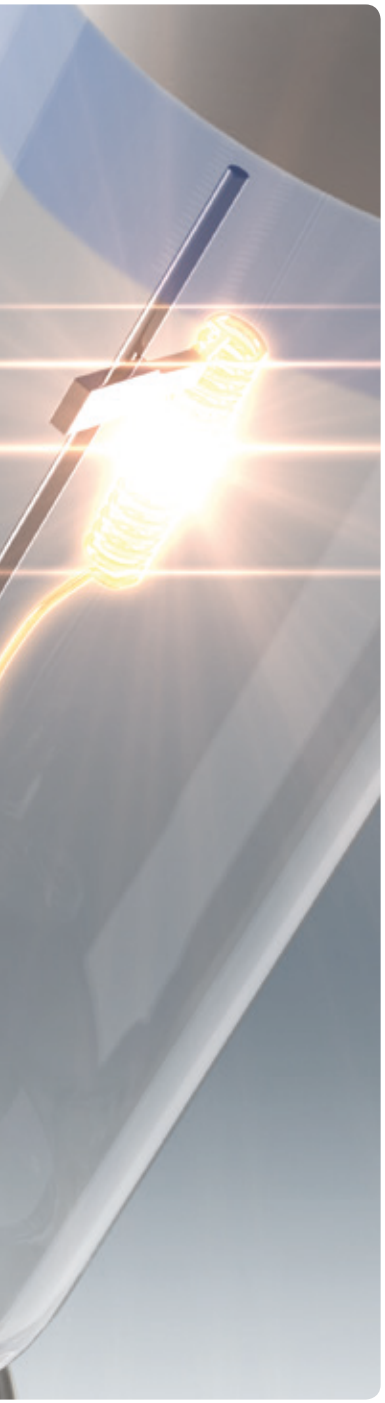

PERFORMANCE + 120

Com até 120% mais luz* e um feixe luminoso até 50m mais comprido*, as lâmpadas +120 estabelecem novos padrões no segmento da iluminação a halogéneo e oferecem ao condutor uma maior segurança e prazer de condução.

A capa mate prateada oferece um visual elegante em faróis transparentes.

Disponível nas versões: H1, H4, H7

CHROME TOP 2.0

Performance e Design. Com até o dobro de luz útil* projetada sobre a estrada e um feixe luminoso até 50 m mais comprido*, o modelo Chrome Top 2.0 convence em termos de design e segurança.

A capa cromada brilhante aumenta os níveis de elegância em faróis transparentes.

Disponível nas versões: H4, H7

* Em comparação com as lâmpadas de halogéneo padrão

LÂMPADAS DE INCANDESCÊNCIA HELLA DE ALTA QUALIDADE

Dispomos de uma vasta oferta de lâmpadas de incandescência. Frequentemente surge a dúvida sobre qual o tipo de lâmpada mais adequada para determinado campo de aplicação. Para simplificar um pouco as coisas, comparámos as características mais importantes. Para que circule sempre com a luz mais adequada.

STANDARD

Standard

Iluminação padrão

Rendimento luminoso adicional [%] *

0 50 100 150

Cor da luz [K]

1 000 2 000 3 000 4 000

Vida útil [h] **

0 500 1 000 1.500

Disponível em:
H1, H3, H4, H7, H8, H9, H11

H1	8GH 002 089-131
H3	8GH 002 090-131
H4	8GJ 002 525-131
H7	8GH 007 157-121
H8	8GH 008 356-121
H9	8GH 008 357-001
H11	8GH 008 358-121

PERFORMANCE

HELLA Halogéneo +90 %

Iluminação +90 %

Rendimento luminoso adicional [%] *

0 50 100 150

Cor da luz [K]

1 000 2 000 3 000 4 000

Vida útil [h] **

0 500 1 000 1.500

Disponível em:
H1, H4, H7

H1	8GH 002 089-531
H3	–
H4	8GJ 002 525-531
H7	8GH 007 157-531
H8	–
H9	–
H11	–

HELLA Halogéneo +120 %

Iluminação +120 %

Rendimento luminoso adicional [%] *

0 50 100 150

Cor da luz [K]

1 000 2 000 3 000 4 000

Vida útil [h] **

0 500 1 000 1.500

Disponível em:
H1, H4, H7

H1	8GH 178 560-471
H3	–
H4	8GJ 178 560-481
H7	8GH 178 560-491
H8	–
H9	–
H11	–

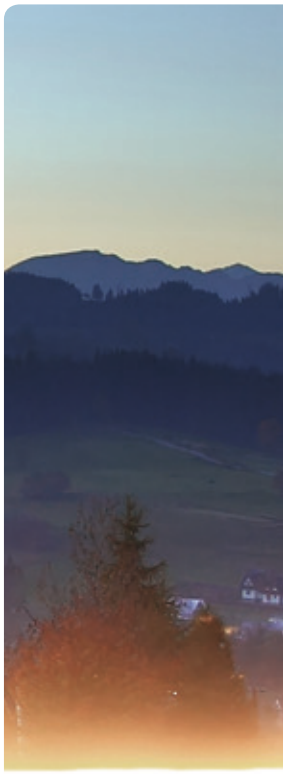

▼ Valor padrão
* Rendimento luminoso complementar que pode ser atingido – em comparação com as lâmpadas de halogéneo padrão
** Vida útil característica Tc [h], por exemplo, do modelo H7

DESIGN

HELLA Blue Light

Iluminação Xenon Blue

Rendimento luminoso adicional [%] *

Cor da luz [K]

Vida útil [h] **

Disponível em:
H1, H3, H4, H7, H8, H9, H11

H1	8GH 002 089-141
H3	8GH 002 090-371
H4	8GJ 002 525-361
H7	8GH 007 157-181
H8	8GH 008 356-181
H9	8GH 008 357-181
H11	8GH 008 358-181

HELLA Chrome Top 2.0

Iluminação Chrome Top
(até +100 %)

Rendimento luminoso adicional [%] *

Cor da luz [K]

Vida útil [h] **

Disponível em:
H4, H7

H1	–
H3	–
H4	8GJ 002 525-981
H7	8GJ 007 157-551
H8	–
H9	–
H11	–

HELLA Yellow Light

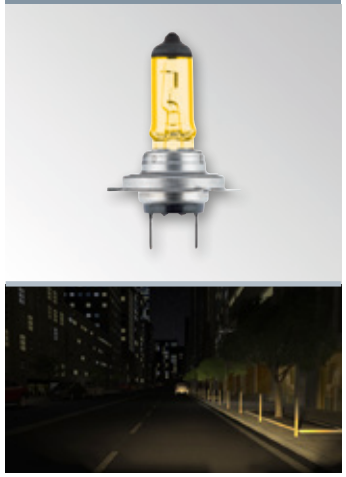

Iluminação Yellow Light

Rendimento luminoso adicional [%] *

Cor da luz [K]

Vida útil [h] **

Disponível em:
H1, H3, H4, H7

H1	8GH 002 089-501
H3	8GH 002-090-481
H4	8GJ 002-525-341
H7	8GH 007-157-481
H8	–
H9	–
H11	–

LIFETIME

HELLA Long Life

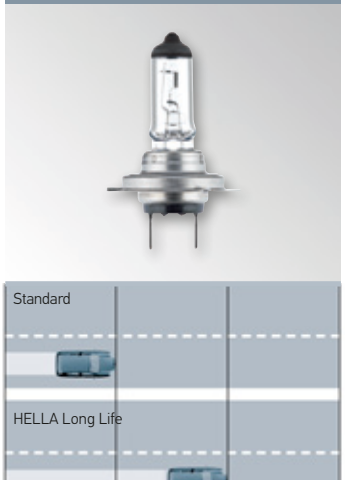

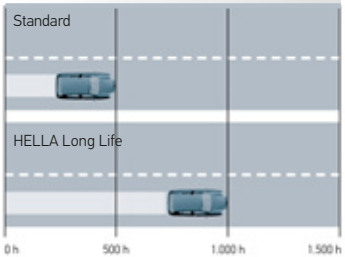

Cor da luz [K]

Vida útil [h] **

Disponível em:
H1, H4, H7

H1	8GH 002 089-351
H3	–
H4	8GJ 002 525-481
H7	8GH 007 157-201
H8	–
H9	–
H11	–

HELLA Super Long Life

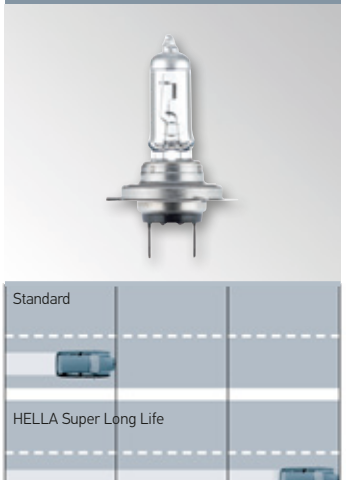

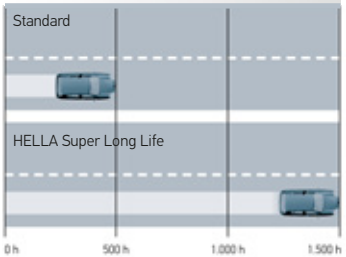

Cor da luz [K]

Vida útil [h] **

Disponível em:
H4, H7

H1	–
H3	–
H4	8GJ 002 525-891
H7	8GH 007 157-451
H8	–
H9	–
H11	–

PADRÃO: PARA MAIOR RENTABILIDADE ECONÓMICA

As lâmpadas de incandescência Standard (padrão) da HELLA oferecem qualidade OE a uma excelente relação preço/qualidade. Estas caracterizam-se por uma excelente potência luminosa, fiabilidade e longa vida útil.

- → Vasto programa para requisitos padrão
- → Eficiência luminosa convincente
- → Longa vida útil
- → Excelente relação preço/qualidade

	ECE DIN	V	W		EAN
HELLA Halogéneo Standard					
8GH 002 089-131	H1	12 V	55 W	P14,5s	4082300022032
8GH 002 090-131	H3	12 V	55 W	PK22s	4082300022018
8GJ 002 525-131	H4	12 V	60/55 W	P43t	4082300021813
8GH 007 157-121	H7	12 V	55 W	PX26d	4082300070446
8GH 008 356-121	H8	12 V	35 W	PGJ19-1	4082300165623
8GH 008 357-001	H9	12 V	65 W	PGJ19-5	4082300149906
8GH 008 358-121	H11	12 V	55 W	PGJ19-2	4082300165630
8GJ 008 837-121	H13	12 V	60/55 W	P26-4t	4082300247664
8GJ 168 119-001	H15	12 V	55/15 W	PGJ23t-1	4082300285581
8GH 005 635-121	HB3	12 V	60 W	P20d (abgewinkelt)	4082300015508
8GH 005 635-161	HB3a	12 V	60 W	P20d (gerade)	4082300247480
8GH 005 636-121	HB4	12 V	51 W	P20d (abgewinkelt)	4082300015515
8GH 005 636-201	HB4a	12 V	51 W	P20d (gerade)	4082300247596
HELLA Sinal Standard					
8GP 002 067-121	T4W	12 V	4 W	BA9s	4082300192117
8GA 002 073-121	P21W	12 V	21 W	BA15s	4082300191493
8GA 006 841-121	PY21W (Amber)	12 V	21 W	BAU15s	4082300191547
8GA 002 071-121	R5W	12 V	5 W	BA15s	4082300191387
8GA 002 071-131	R10W	12 V	10 W	BA15s	4082300191394
8GP 003 594-121	W5W	12 V	5 W	W2,1x9,5d	4082300192209
8GA 008 892-002	W21W	12 V	21 W	W3x16d	4082300176193

	ECE DIN	V	W		EAN
HELLA Halogéneo Standard					
8GH 002 089-251	H1	24 V	70 W	P14,5s	4082300022049
8GH 002 090-251	H3	24 V	70 W	PK22s	4082300022025
8GJ 002 525-251	H4	24 V	75/70 W	P43t	4082300021998
8GH 007 157-241	H7	24 V	70 W	PX26d	4082300082852
8GH 008 358-241	H11	24 V	70 W	PGJ19-2	4082300245981
8GJ 168 119-241	H15	24 V	60/20 W	PGJ23t-1	4082300336283
8GD 002 088-271	R2	24 V	55/50 W	P45t	4082300523614
HELLA Sinal Standard					
8GP 002 067-241	T4W	24 V	4 W	BA9s	4082300192124
8GA 002 073-241	P21W	24 V	21 W	BA15s	4082300191509
8GA 006 841-241	PY21W (Amber)	24 V	21 W	BAU15s	4082300191554
8GA 002 071-241	R5W	24 V	5 W	BA15s	4082300191400
8GA 002 071-251	R10W	24 V	10 W	BA15s	4082300191417
8GM 002 092-241	C5W	24 V	5 W	SV8,5-8	4082300192056
8GP 003 594-251	W5W	24 V	5 W	W2,1x9,5d	4082300192230

LIFETIME: PARA UMA VIDA ÚTIL MAIS LONGA

Lâmpadas de halogéneo Long Life da HELLA (12 V) têm uma vida útil mais longa e têm um impacto ambiental mais reduzido, graças à menor frequência de substituição.

As lâmpadas de halogéneo Super Long Life da HELLA (12 V), com uma vida útil até 3x mais longa*, oferecem uma excelente relação preço/qualidade e são a opção ideal para motoristas ou profissionais que viajam muito.

Lifetime é sinónimo de

- → Proteção do meio ambiente graças a uma longa vida útil
- → Eficiência luminosa convincente
- → Vida útil mais elevada
- → Excelente relação preço/qualidade
- → Substituição mais rara da lâmpada

	ECE DIN	V	W		EAN	i
HELLA Super Long Life						
8GJ 002 525-891	H4	12 V	60/55 W	P43t	4082300557220	Vida útil máxima
8GH 007 157-451	H7	12 V	55 W	PX26d	4082300557237	Vida útil máxima
HELLA Long Life						
8GH 002 089-351	H1	12 V	55 W	P14,5s	4082300166590	Vida útil mais longa
8GJ 002 525-481	H4	12 V	60/55 W	P43t	4082300165142	Vida útil mais longa
8GH 007 157-201	H7	12 V	55 W	PX26d	4082300165173	Vida útil mais longa
8GH 007 643-171	H6W	12 V	6 W	BAX9s	4082300191950	Vida útil mais longa
8GH 008 417-001	H21W	12 V	21 W	BAY9s	4082300150742	Vida útil mais longa
8GA 002 073-271	P21W	12 V	21 W	BA15s	4082300191523	Vida útil mais longa
8GD 004 772-151	P21/4W	12 V	21/4 W	BAZ15d	4082300191929	Vida útil mais longa
8GD 002 078-221	P21/5W	12 V	21/5 W	BAY15d	4082300191899	Vida útil mais longa
8GD 002 088-141	R2	12 V	45/40 W	P45t	4082300294705	Vida útil mais longa

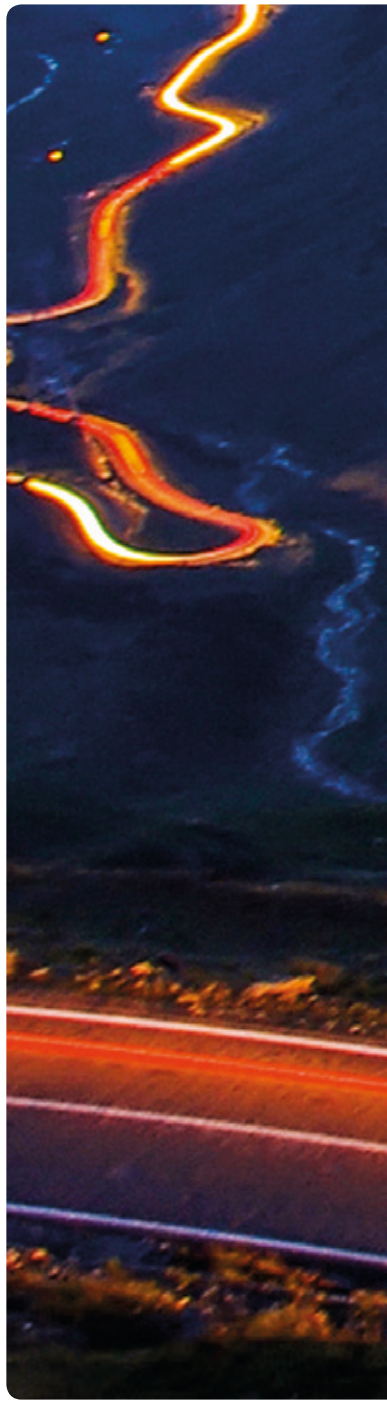

* Em comparação com as lâmpadas de halogéneo padrão

As lâmpadas de halogéneo Heavy Duty HELLA (24 V) foram especialmente concebidas para o funcionamento em condições adversas, como é o caso em máquinas de construção ou veículos agrícolas. O modelo Heavy Duty produz uma luz clara de elevada luminosidade, tem uma longa vida útil e é extremamente robusto e resistente às vibrações.

As lâmpadas de halogéneo Double Power HELLA (24 V) consistem na tecnologia "single coil", têm uma intensidade luminosa muito forte e têm uma vida útil duas vezes mais longa*.

	ECE DIN	V	W		EAN	i
HELLA Heavy Duty						
8GH 002 089-361	H1	24 V	70 W	P14,5s	4082300166606	Resistente a vibrações
8GJ 002 525-281	H4	24 V	75/70 W	P43t	4082300021820	Resistente a vibrações
8GA 002 073-251	P21W	24 V	21 W	BA15s	4082300191516	Resistente a vibrações
8GA 006 841-251	PY21W (Amber)	24 V	21 W	BAU15s	4082300191561	Resistente a vibrações
8GD 002 078-011	P21/5W	24 V	21/5 W	BAY15d	4082300191875	Resistente a vibrações
8GA 002 071-261	R5W	24 V	5 W	BA15s	4082300191424	Resistente a vibrações
8GA 002 071-271	R10W	24 V	10 W	BA15s	4082300191431	Resistente a vibrações
8GP 002 067-261	T4W	24 V	4 W	BA9s	4082300192131	Resistente a vibrações
HELLA Double Power						
8GH 002 089-491	H1	24 V	70 W	P14,5s	4082300240627	Dobro da vida útil
8GH 002 090-471	H3	24 V	70 W	PK22s	4082300240634	Dobro da vida útil
8GJ 002 525-511	H4	24 V	75/70 W	P43t	4082300240641	Dobro da vida útil
8GH 007 157-231	H7	24 V	55 W	PX26d	4082300235999	Dobro da vida útil
8GH 008 358-251	H11	24 V	70 W	PGJ19-2	4082300240658	Dobro da vida útil

PERFORMANCE: PARA MAIS LUZ

Graças à tecnologia inovadora, as lâmpadas Performance HELLA iluminam mais intensamente a estrada do que as lâmpadas de incandescência convencionais: uma vertente económica da categoria Performance é a lâmpada Performance +30 com até 30 % mais luz* e uma longa vida útil.

A Performance +50 produz 50 % mais luz* e um feixe luminoso aprox. 20 % mais comprido, oferecendo ao condutor segurança complementar.

No topo das lâmpadas de halogéneo Performance HELLA situam-se as lâmpadas +90 e +120, as quais estão equipadas com um filamento otimizado, que foram sujeitas a um processo de revestimento especial e dispõem de um enchimento de 100 por cento de gás raro, garantindo a melhor performance no segmento das lâmpadas incandescentes de halogéneo.

	ECE DIN	V	W		K	EAN	i
HELLA Halogen +30 %							
8GJ 002 525-001	H4	12 V	60/55 W	P43t	3200 K	4082300152661	+30 % & vida útil mais longa
8GH 007 157-561	H7	12 V	55W	PX26d	3200 K	4082300608489	Até 30 % mais luz
8GH 008 358-151	H11	12 V	55 W	PGJ19-2	3200 K	4082300253672	Até 30 % mais luz
HELLA Halogen +50 %							
8GH 002 089-471	H1	12 V	55 W	P14,5s	3200 K	4082300157147	Até 50 % mais luz
8GJ 002 525-471	H4	12 V	60/55 W	P43t	3200 K	4082300157154	Até 50 % mais luz
8GH 007 157-471	H7	12 V	55 W	PX26d	3200 K	4082300157161	Até 50 % mais luz

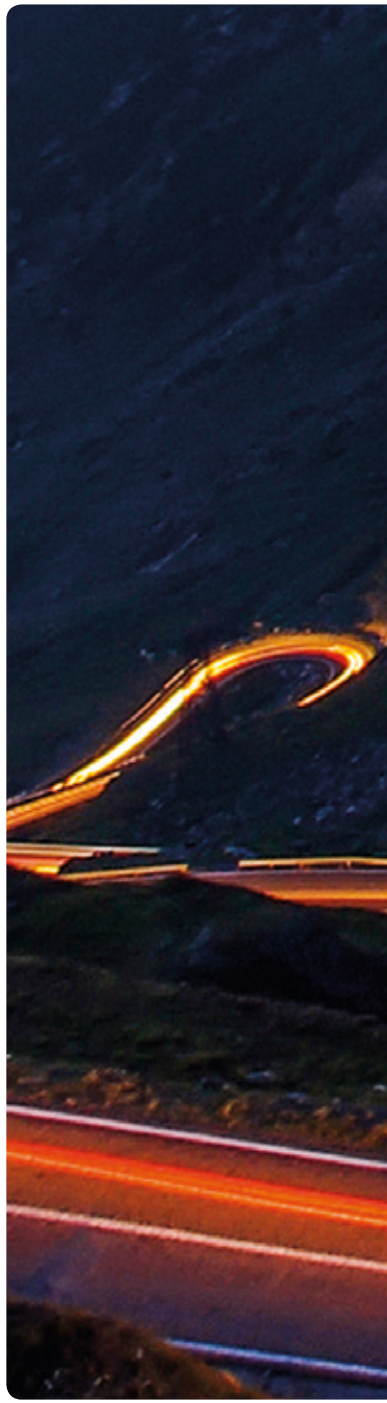

* Em comparação com as lâmpadas de halogéneo padrão

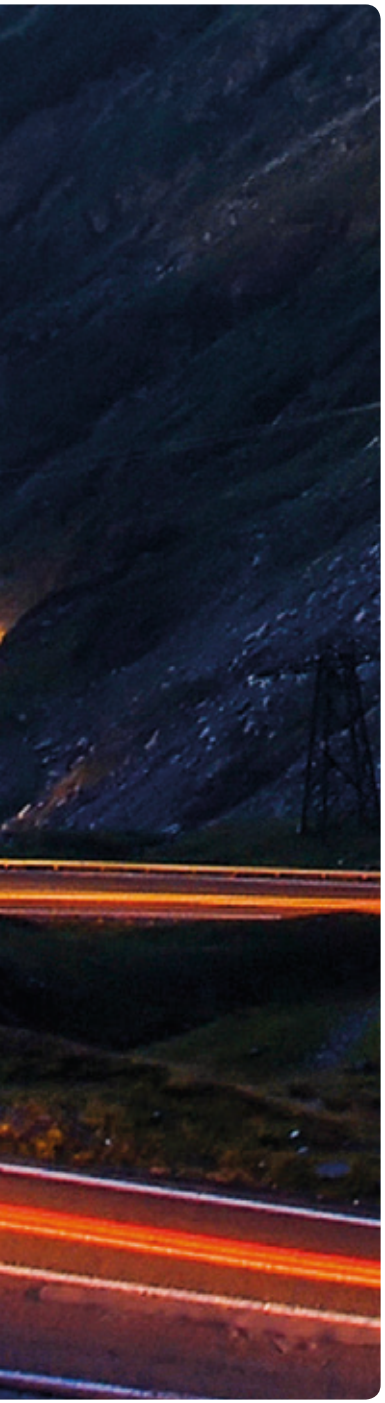

Com até 120% mais luz* e um feixe luminoso até 50m mais comprido*, as lâmpadas +120 estabelecem novos padrões no segmento da iluminação a halogéneo e oferecem ao condutor uma maior segurança e prazer de condução.

A capa prateada oferece um visual elegante em faróis transparentes.

Lâmpada de incandescência padrão

Lâmpada de incandescência de halogéneo +120

	ECE DIN	V	W		K	EAN	i
HELLA Halogen +90 %							
8GH 002 089-531	H1	12 V	55 W	P14,5s	3500 K	4082300287042	Embalagem individual
8GJ 002 525-531	H4	12 V	60/55 W	P43t	3500 K	4082300266689	Embalagem individual
8GJ 002 525-534	H4	12 V	60/55 W	P43t	3500 K	4082300311341	Display com 6 conjuntos = 12 lâmpadas
8GH 007 157-531	H7	12 V	55 W	PX26d	3500 K	4082300266894	Embalagem individual
8GH 007 157-533	H7	12 V	55 W	PX26d	3500 K	4082300311327	Display com 8 conjuntos = 16 lâmpadas
HELLA Halogen +120 %							
8GH 178 560-471	H1	12 V	55 W	P14,5s	3500 K	4082300502817	Embalagem individual
8GJ 178 560-481	H4	12 V	60/55 W	P43t	3500 K	4082300502824	Embalagem individual
8GJ 178 560-483	H4	12 V	60/55 W	P43t	3500 K	4082300451757	Display com 9 conjuntos = 18 lâmpadas
8GH 178 560-491	H7	12 V	55 W	PX26d	3500 K	4082300502831	Embalagem individual
8GH 178 560-493	H7	12 V	55 W	PX26d	3500 K	4082300451740	Display com 9 conjuntos = 18 lâmpadas
HELLA Chrome Top 2.0							
8GJ 002 525-981	H4	12 V	60/55 W	P43t	3600 K	4082300566079	Embalagem individual
8GJ 002 525-982	H4	12 V	60/55 W	P43t	3600 K	4082300608496	Conjunto com 2 lâmpadas
8GH 007 157-551	H7	12 V	55 W	PX26d	3700 K	4082300566055	Embalagem individual
8GH 007 157-552	H7	12 V	55 W	PX26d	3700 K	4082300608502	Conjunto com 2 lâmpadas

DESIGN: PARA OS MAIS EXIGENTES

Os requisitos especiais exigidos ao design e à segurança de condução são satisfeitos pelas nossas lâmpadas de design: com o moderno efeito xénon, a Blue Light é a alternativa para o condutor com gosto pelo design: Graças a um processo de revestimento especial, as lâmpadas Blue Light da HELLA atingem uma temperatura da cor de aprox. 4.000 K, similar à de uma lâmpada de xénon e oferecem até 20 % mais claridade*. A luz azul-branca oferece uma iluminação especial da faixa de rodagem, maior conforto e segurança.

Também no segmento da sinalização luminosa a HELLA dispõe de um verdadeiro Highlight: as lâmpadas de piscas HELLA Magic Start foram especialmente concebidas para faróis em vidro transparente. Graças a uma pintura com um esmalte especial, estas confundem-se com o refletor prateado e brilham apenas a amarelo quando piscam. Além disso, têm o dobro da vida útil das lâmpadas de pisca convencionais.

	ECE DIN	V	W		K	EAN
HELLA Blue Light						
8GH 002 089-141	H1	12 V	55 W	P14,5s	4000 K	4082300101942
8GH 002 090-371	H3	12 V	55 W	PK22s	4000 K	4082300101959
8GJ 002 525-361	H4	12 V	60/55 W	P43t	4000 K	4082300097702
8GH 007 157-181	H7	12 V	55 W	PX26d	4000 K	4082300101966
8GH 008 356-181	H8	12 V	35 W	PGJ19-1	4000 K	4082300259810
8GH 008 358-181	H11	12 V	55 W	PGJ19-2	4000 K	4082300253689
8GP 003 594-261	W5W	12 V	5 W	W2,1x9,5d	4000 K	4082300240184
HELLA Magic Star (Set)						
8GP 006 841-801**	PY21W (Amber)	12 V	21 W	BAU15s		4082300145632

* Em comparação com as lâmpadas de halogéneo padrão
** Conjunto composto por 2 lâmpadas; vida útil mais elevada

XÉNON: PARA UMA POTÊNCIA AINDA MAIOR

Há mais de 100 anos que a HELLA é sinónimo de líder tecnológico, para ver e ser visto em condições otimizadas. A moderna tecnologia de xénon é um marco em termos de segurança de condução e conforto. Com uma temperatura da cor de 4300 Kelvin e o dobro da claridade das lâmpadas de halogéneo e uma eficiência luminosa três vezes superior, a luz branca da nova geração das lâmpadas de xénon assegura um aumento da segurança e uma condução relaxada.

As novas lâmpadas HELLA XÉNON +30 têm uma temperatura de cor de até 5.000 Kelvin, aproximando-se à luz de circulação diurna LED dos veículos modernos e oferecem com uma iluminação máxima condições de visão similares às da luz do dia.

Vantagens das lâmpadas de descarga de gás

- Larga e clara distribuição luminosa
- Longa vida útil
- Baixo consumo de energia
- Elevada temperatura da cor produz uma luz mais branca
- Distribuição homogénea da luz (sem formação de sombras)
- Resistente a vibrações

	ECE DIN	W		K	T_c	B_3	EAN	i
HELLA Xenon								
8GS 009 028-111	D1S	35 W	PK32d-2	4300 K	3000 h	2000 h	4082300496253	Nova geração
8GS 007 949-261	D2S	35 W	P32d-2	4300 K	3000 h	2000 h	4082300496390	Nova geração
8GS 007 001-151	D2R	35 W	P32d-3	4300 K	3000 h	2000 h	4082300496413	Nova geração
8GS 009 028-311	D3S*	35 W	PK32d-5	4300 K	2500 h	1500 h	4082300496260	Nova geração
8GS 007 949-311	D4S*	35 W	P32d-5	4300 K	3000 h	2000 h	4082300496406	Nova geração
HELLA Xenon +30								
8GS 009 028-621	D1S	35 W	PK32d-2	5000 K	2500 h	1500 h	4082300496277	+30 % mais luz
8GS 007 949-251	D2S	35 W	P32d-2	5000 K	2500 h	1500 h	4082300496284	+30 % mais luz
8GS 007 001-241	D2R	35 W	P32d-3	5000 K	2500 h	1500 h	4082300496420	+30 % mais luz

Todas as lâmpadas de descarga de gás apenas devem ser utilizadas com um balastro elétrico autorizado.
* Sem mercúrio

LED RETROFIT: PARA MAIS DESIGN

Luz moderna no habitáculo da viatura num abrir e fechar de olhos – com as novas lâmpadas LED Retrofit
A utilização de iluminação LED nos veículos é cada vez mais importante. Através da utilização de sistemas de iluminação inteligentes com LEDs, por exemplo, nos faróis e farolins, são criadas novas possibilidades de design para o exterior, mas também para o interior das viaturas. As novas lâmpadas LED Retrofit da HELLA caracterizam-se por cores de temperatura agradáveis, uma luminosidade de alta performance e especialmente pela elevada eficiência energética e longa vida útil*.

A atualização para a nova tecnologia é muito simples e rápida, graças ao princípio "Plug and Play". O ambiente no habitáculo pode ser escolhido a gosto, graças à possibilidade de escolha entre luz branca quente e fria.

Avisos legais
As lâmpadas LED Retrofit não estão em conformidade com as normas ECE. Estas só podem ser utilizadas em todo-o-terreno ou nos habitáculos dos veículos. A utilização destas lâmpadas na via pública, isto é, na circulação rodoviária tem como consequência a invalidação da homologação da respetiva viatura e do seguro.

	ECE DIN	V	W	lm	K	EAN	i
HELLA LED Retrofit							
8GL 178 560-551	SV8,5-8	12 V	1 W	35 lm	4000 K	4082300557671	Embalagem blíster individual (1 lâmpada)
8GL 178 560-561	SV8,5-8	12 V	1 W	35 lm	5000 K	4082300557688	Embalagem blíster individual (1 lâmpada)
8GL 178 560-571	SV8,5-8	12 V	1 W	35 lm	4000 K	4082300558272	Embalagem blíster individual (1 lâmpada)
8GL 178 560-581	SV8,5-8	12 V	1 W	35 lm	5000 K	4082300557992	Embalagem blíster individual (1 lâmpada)
8GL 178 560-591	W2,1x9,5d	12 V	1 W	65 lm	4000 K	4082300558005	Embalagem blíster dupla (2 lâmpadas)
8GL 178 560-601	W2,1x9,5d	12 V	1 W	65 lm	5000 K	4082300558012	Embalagem blíster dupla (2 lâmpadas)

* Em comparação com as lâmpadas de halogéneo padrão

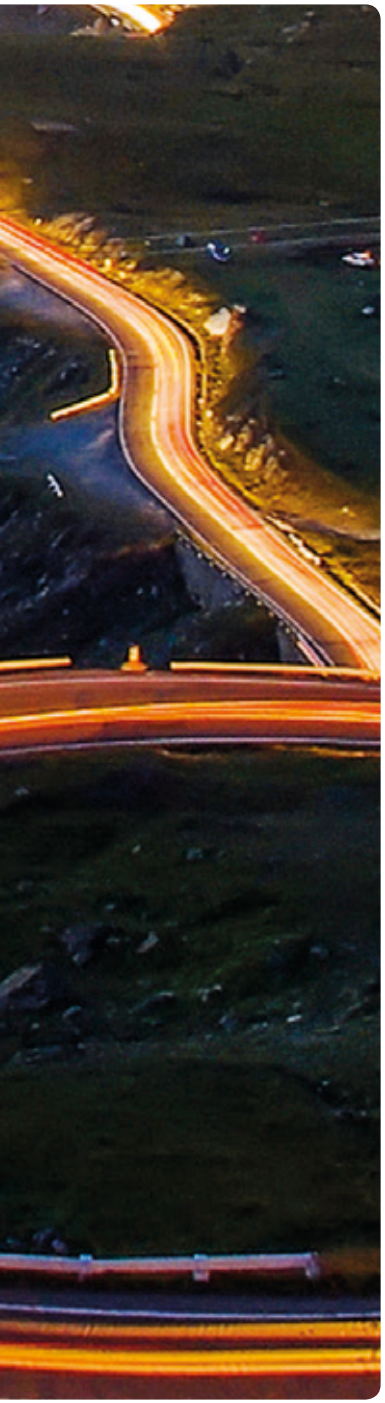

Vantagens das novas lâmpadas LED Retrofit da HELLA em relação às lâmpadas pequenas convencionais:

- → Longa vida útil
- → Duas cores à escolha:
  (branco quente 4 000 K, branco frio 5 000 K)
- → Possibilidade de aplicação: habitáculo e todo-o-terreno
- → Atualização muito simples para a tecnologia LED, graças ao princípio "Plug and Play"
- → Distribuição homogénea da luz
- → Diversas possibilidades de aplicação no habitáculo
- → Consumo de energia muito mais reduzido*
- → Resistente a choques e vibrações

Lâmpadas convencionais

HELLA LED Retrofit (5 000 K)

EMBALAGENS BLÍSTER 12 V

As lâmpadas de incandescência de veículos ligeiros de passageiros da HELLA oferecem qualidade OE a uma excelente relação preço/qualidade. Estas caracterizam-se por uma excelente potência luminosa, fiabilidade e longa vida útil.

- Vasto programa para requisitos padrão
- Elevada eficiência luminosa
- Longa vida útil
- Excelente relação preço/qualidade

Vantagens da embalagem blíster da HELLA

- Sistema de suspensão estandardizado, compatível com todos os expositores e estantes
- Embalagem de fácil eliminação, composta por dois materiais de simples separação (papel e plástico)
- Design antirroubo que permite uma abertura fácil e que previne um desempacotamento sem sinais de abertura
- Lâmpadas de halogéneo padrão embaladas separadamente
- Lâmpadas de halogéneo "de valor acrescentado" e lâmpadas para luzes de sinalização e luzes pequenas no blíster duplo

			HELLA		V	W		i	EAN
H1			8GH 002 089-136	1	12	55	P14,5,s		4082300560831
			8GH 002 089-146	2	12	55	P14,5,s	Blue Light	4082300560930

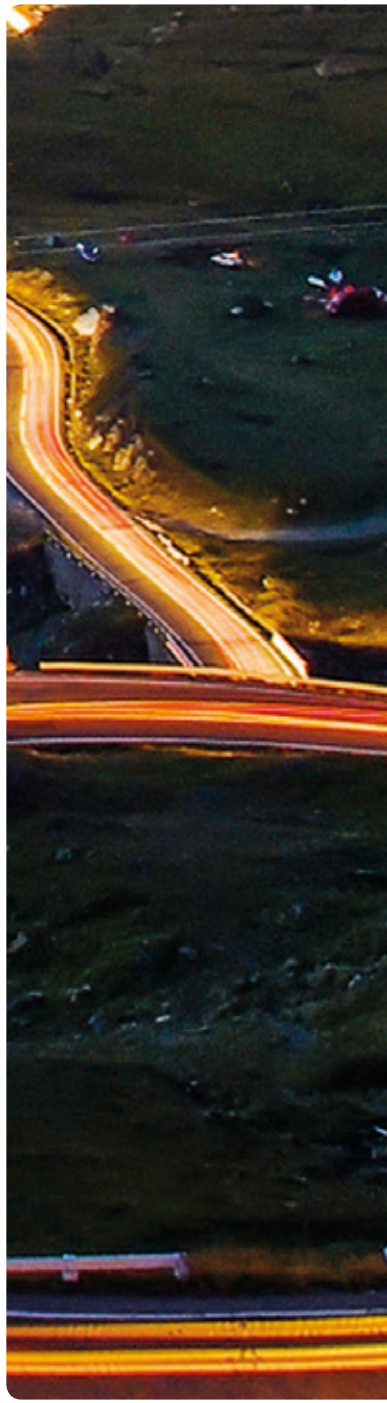

				V	W		i	EAN
H3			8GH 002 090-136	1	12	55	PK22s		4082300185546
H4			8GJ 002 525-136	1	12	60/55	P43t		4082300185539
			8GJ 002 525-893	2	12	60/55	P43t	Super Long Life	4082300560602
			8GJ 002 525-366	2	12	60/55	P43t	Blue Light	4082300560947
			8GJ 002 525-473	2	12	60/55	P43t	+50	4082300560848

				V	W		i	EAN
H7			8GH 007 157-126	1	12	55	PX26d		4082300560855
H7			8GH 007 157-453	2	12	55	PX26d	Super Long Life	4082300560763
			8GH 007 157-186	2	12	55	PX26d	Blue Light	4082300560954
			8GH 007 157-473	2	12	55	PX26d	+50	4082300215397
P21W			8GA 002 073-123	2	12	21	BA15s		4082300185508

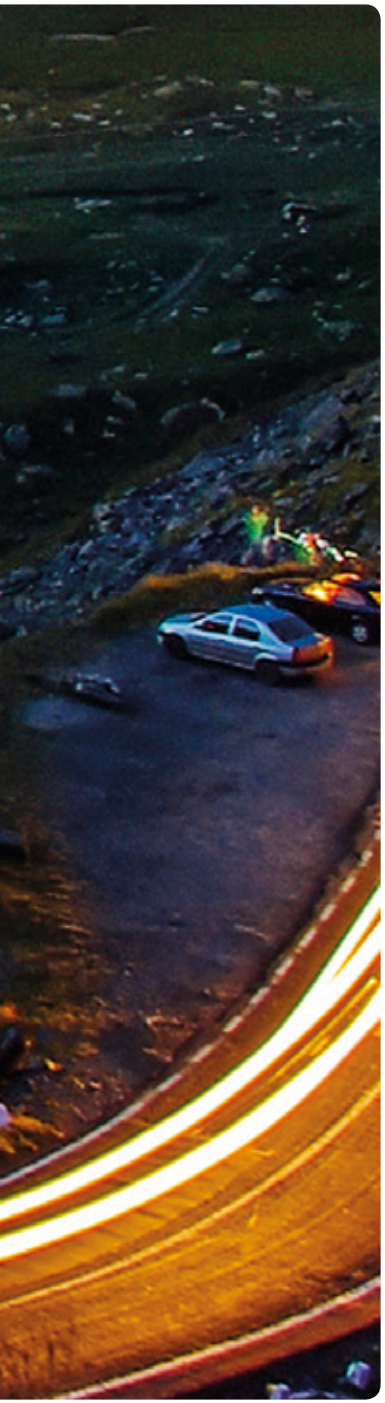

				V	W		i	EAN
PY21W		■	8GA 006 841-123	2	12	21	BAU15s		4082300215380
P21/4W		■	8GD 004 772-123	2	12	21/4	BAY15d		4082300244809
R10W		■	8GA 002 071-133	2	12	10	BA15s		4082300244441
T4W		■	8GP 002 067-123	2	12	4	BA9s		4082300185515

				V	W		i	EAN
W5W			8GP 003 594-123	2	12	5	W2.1x9.5d		4082300215373
			8GP 003 594-263	2	12	5	W2.1x9.5d	Blue Light	4082300560787
WY5W			8GP 003 594-543	2	12	5	W2.1x9.5d	Amber	4082300244816

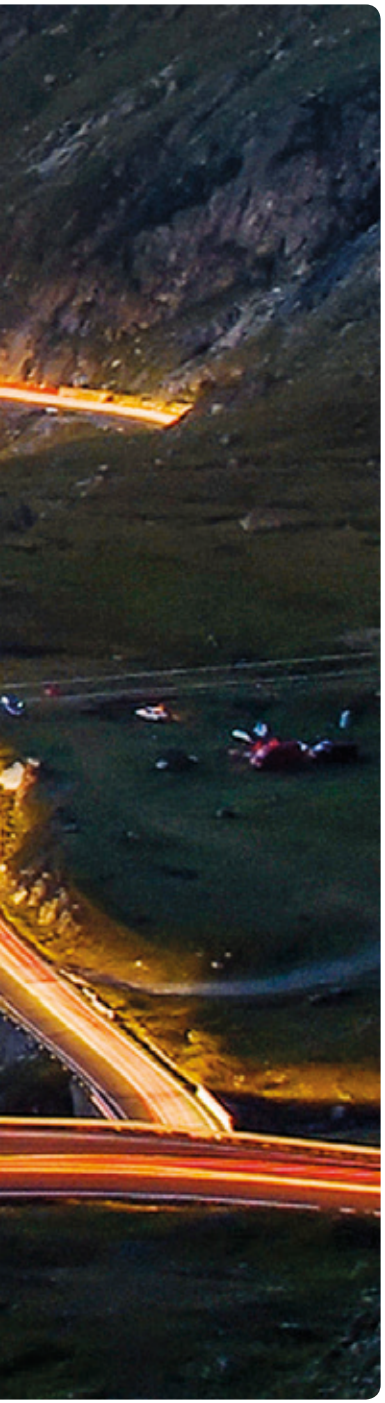

EMBALAGENS BLÍSTER 24 V

As lâmpadas de incandescência de veículos utilitários da HELLA oferecem qualidade OE a uma excelente relação preço/qualidade. Estas caracterizam-se por uma excelente potência luminosa, fiabilidade e longa vida útil.

- Vasto programa para requisitos padrão
- Elevada eficiência luminosa
- Longa vida útil
- Excelente relação preço/qualidade

Vantagens da embalagem blíster da HELLA

- Sistema de suspensão estandardizado, compatível com todos os expositores e estantes
- Embalagem de fácil eliminação, composta por dois materiais de simples separação (papel e plástico)
- Design antirroubo que permite uma abertura fácil e que previne um desempacotamento sem sinais de abertura
- Lâmpadas de halogéneo padrão embaladas separadamente
- Lâmpadas de halogéneo "de valor acrescentado" e lâmpadas para luzes de sinalização e luzes pequenas no blíster duplo

			HELLA		V	W		i	EAN
H1		■	8GH 002 089-258	1	24	70	P14,5,s		4082300560978
H3		■	8GH 002 090-258	1	24	70	PK22s		4082300560985

		HELLA		V	W		i	EAN
H4		8GJ 002 525-258	1	24	75/70	P43t		4082300560992
H7		8GH 007 157-248	1	24	70	PX26d		4082300561005
P21W		8GA 002 073-248	2	24	21	BA15s		4082300561012
P21/5W		8GD 002 078-248	2	24	21/5	BAY15d		4082300561029

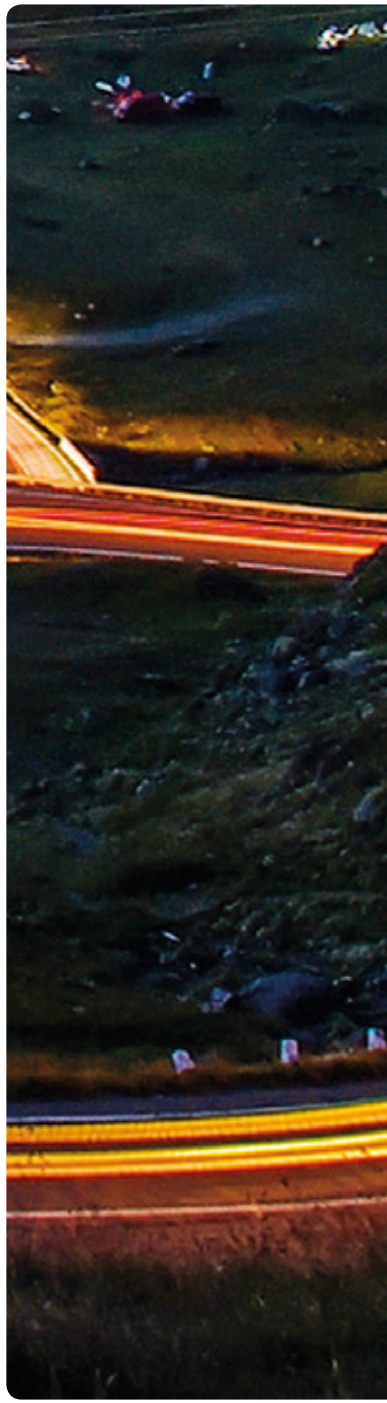

				V	W		i	EAN
R5W		■	8GA 002 071-248	2	24	5	BA15s		4082300561036
R10W		■	8GA 002 071-258	2	24	10	BA15s		4082300562736
W5W		■	8GP 003 594-258	2	24	5	W2.1x9.5d		4082300561050

CAIXAS DE SORTIDOS

SEMPRE BEM PREPARADO

As lâmpadas avariam maioritariamente quando ligamos as luzes, durante a noite ou em viagem. Nestas situações não é fácil encontrar uma peça sobressalente. De modo a estar preparado para estas situações, a HELLA tem no seu programa diferentes caixas de sortidos.

Uma boa visibilidade em todas as situações é o requisito base para uma condução segura. Por este motivo, as caixas de sortidos HELLA incluem as lâmpadas de faróis mais convencionais, mas também lâmpadas de sinalização, pisca e de marcação, bem como uma seleção de fusíveis.

Caixa de sortido H4 de 24 V	8GJ 002 525-941	1	24 V	A caixa dispõe de um conjunto de lâmpadas de farol H4, duas lâmpadas de sinalização convencionais e seis fusíveis			
		2	24 V	H4	70/70 W	P43t	8GJ 002 525-253
		2	24 V	T4W	4 W	BA9s	8GP 002 067-241
		2	24 V	C5W	5 W	SV8,5-8	8GM 002 092-241
		2	24 V	R10W	10 W	SV8,5-8	8GA 002 071-251
		2	24 V	P21W	21 W	BA15s	8GA 002 073-241
		2	24 V	P21/5W	21/5 W	BAY15d	8GD 002 078-241
		6		Blade-type fuses	2x10 A, 2x15 A, 2x30 A		

Caixa de sortido H7 de 24 V	8GH 007 157-931	1	24 V	A caixa dispõe de um conjunto de lâmpadas de farol H7, duas lâmpadas de sinalização convencionais e seis fusíveis			
		2	24 V	H7	55 W	PX26d	8GH 007 157-241
		2	24 V	C5W	5 W	SV8,5-8	8GM 002 092-241
		2	24 V	R10W	10 W	SV8,5-8	8GA 002 071-251
		2	24 V	P21W	21 W	BA15s	8GA 002 073-241
		2	24 V	W5W	5 W	W2,1x9,5d	8GP 003 594-251
		2	24 V	P21/5W	21/5 W	BAY15d	8GD 002 078-241
		6		Blade-type fuses	2x10 A, 2x15 A, 2x30 A		

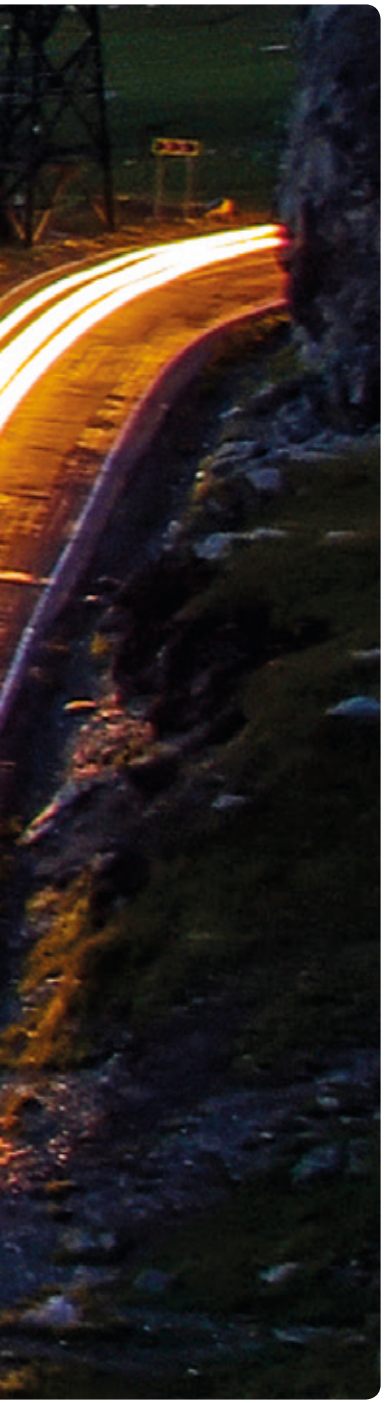

Caixa de sortido H4 de 12 V	8GJ 002 525-913	1	12 V	A caixa dispõe de uma lâmpada de farol H4, lâmpadas de sinalização convencionais e três fusíveis			
		1	12 V	H4	60/55 W	P43t	8GJ 002 525-133
		1	12 V	T4W	4 W	BA9s	8GP 002 067-121
		1	12 V	R5W	5 W	BA15s	8GA 002 071-121
		1	12 V	P21W	21 W	BA15s	8GA 002 073-121
		1	12 V	P21/5W	21/5 W	BAY15d	8GD 002 078-121
		3		Blade-type fuses	10 A, 15 A, 30 A		

Caixa de sortido H7 de 12 V	8GH 007 157-901	1	12 V	A caixa dispõe de uma lâmpada de farol H7, lâmpadas de sinalização convencionais e três fusíveis			
		1	12 V	H7	55 W	PX26d	8GH 007 157-121
		1	12 V	C5W	5 W	SV8,5-8	8GM 002 092-121
		1	12 V	R5W	5 W	BA15s	8GA 002 071-121
		1	12 V	W5W	5 W	W2,1x9,5d	8GP 003 594-121
		1	12 V	P21W	21 W	BA15s	8GA 002 073-121
		1	12 V	PY21W	21 W	BAU15s	8GA 006 841-121
		1	12 V	P21/5W	21/5 W	BAY15d	8GD 002 078-121
		1	12 V	P21/4W	21/4 W	BAZ15d	8GD 004 772-121
		3		Blade-type fuses	10 A, 15 A, 30 A		

Caixa de sortido pequena H4 de 12 V	8GJ 002 525-971	1	12 V	A caixa dispõe de uma lâmpada de farol H4, lâmpadas de sinalização convencionais e três fusíveis			
		1	12 V	H4	60/55 W	P43t	8GJ 002 525-133
		1	12 V	T4W	4 W	BA9s	8GP 002 067-121
		1	12 V	R5W	5 W	BA15s	8GA 002 071-121
		1	12 V	P21W	21 W	BA15s	8GA 002 073-121
		3		Blade-type fuses	10 A, 15 A, 30 A		

Caixa de sortido pequena H7 de 12 V	8GH 007 157-941	1	12 V	A caixa dispõe de uma lâmpada de farol H7, lâmpadas de sinalização convencionais e três fusíveis			
		1	12 V	H7	55 W	PX26d	8GH 007 157-121
		1	12 V	T4W	4 W	BA9s	8GP 002 067-121
		1	12 V	R5W	5 W	BA15s	8GA 002 071-121
		1	12 V	P21W	21 W	BA15s	8GA 002 073-121
		3		Blade-type fuses	10 A, 15 A, 30 A		

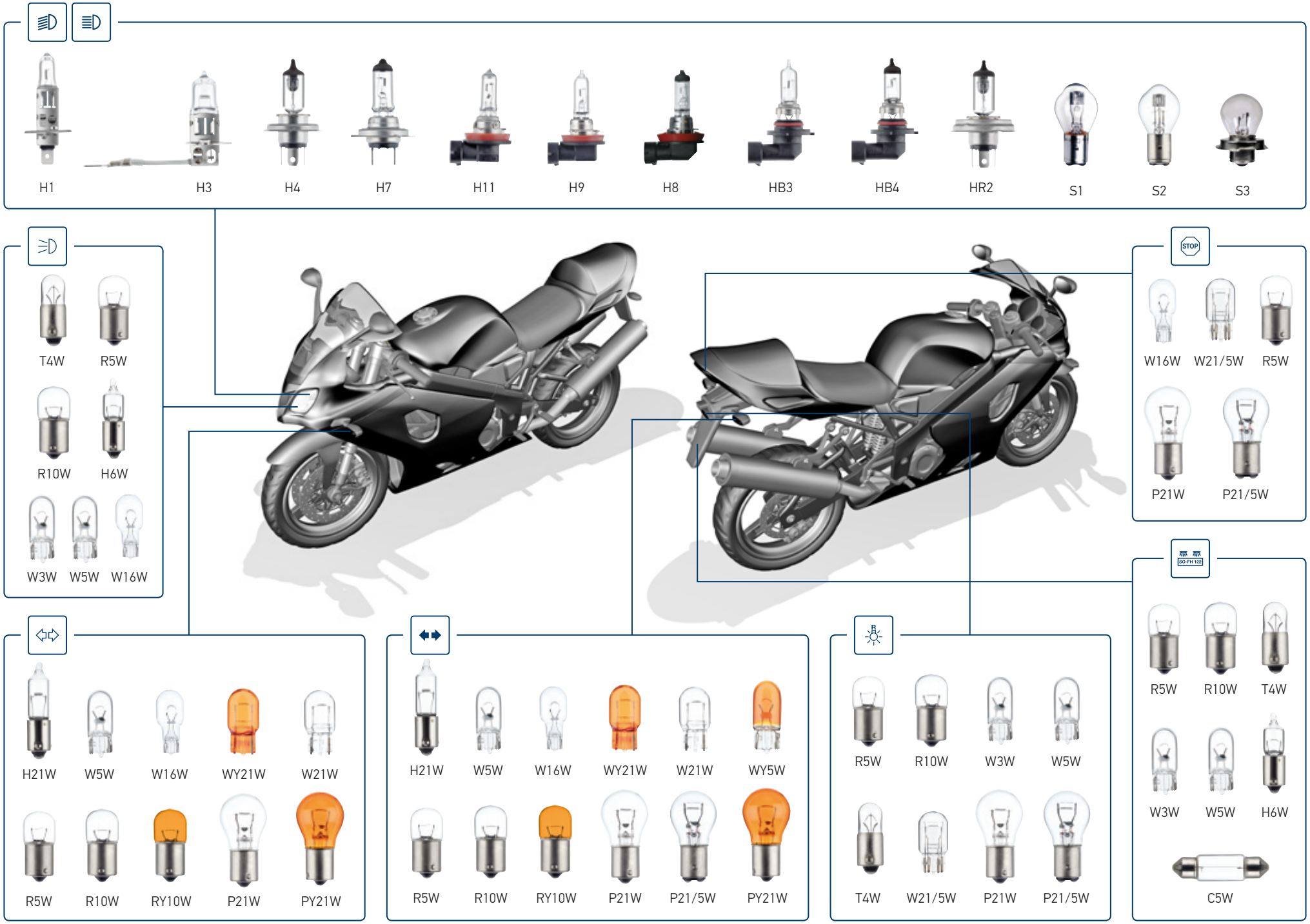
H1
H3
H4
H7
H11
H9
H8
HB3
HB4
HR2
S1
S2
S3
T4W
R5W
R10W
H6W
W3W
W5W
W16W
STOP
W16W
W21/5W
R5W
P21W
P21/5W
ECE-R 122
R5W
R10W
T4W
W3W
W5W
H6W
C5W
H21W
W5W
W16W
WY21W
W21W
R5W
R10W
RY10W
P21W
PY21W
H21W
W5W
W16W
WY21W
W21W
WY5W
R5W
R10W
RY10W
P21W
P21/5W
PY21W
R5W
R10W
W3W
W5W
T4W
W21/5W
P21W
P21/5W

12 V							
H1							
		8GH 002 089-131	1	12	55	P14.5s	
		8GH 002 089-141	1	12	55	P14.5s	Blue Light
		8GH 002 089-351	1	12	55	P14.5s	Long Life
		8GH 002 089-471	1	12	55	P14.5s	+50
		8GH 002 089-531	1	12	55	P14.5s	+90
H3							
		8GH 002 090-131	1	12	55	PK22s	
		8GH 002 090-371	1	12	55	PK22s	Blue Light
H4							
		8GJ 002 525-131	1	12	60/55	P43t	
		8GJ 002 525-361	1	12	60/55	P43t	Blue Light
		8GJ 002 525-301	1	12	60/55	P43t	Heavy Duty
		8GJ 002 525-001	1	12	60/55	P43t	+30/Long Life
		8GJ 002 525-471	1	12	60/55	P43t	+50
		8GJ 002 525-531	1	12	60/55	P43t	+90
		8GJ 178 560-481	1	12	60/55	P43t	+120
		8GJ 002 525-981	1	12	60/55	P43ts	Chrome Top 2.0
H7							
		8GH 007 157-121	1	12	55	PX26d	
		8GH 007 157-181	1	12	55	PX26d	Blue Light
		8GH 007 157-201	1	12	55	PX26d	Long Life
		8GH 007 157-451	1	12	55	PX26d	Super Long Life
		8GH 007 157-471	1	12	55	PX26d	+50
		8GH 007 157-531	1	12	55	PX26d	+90
		8GH 178 560-491	1	12	55	PX26d	+120
		8GH 007 157-551	1	12	55	PX26d	Chrome Top 2.0

12 V							
H8							
		8GH 008 356-121	1	12	35	PGJ19-1	
		8GH 008 356-181	1	12	35	PGJ19-1	Blue Light
H9							
		8GH 008 357-001	1	12	65	PGJ19-5	
H11							
		8GH 008 358-121	1	12	55	PGJ19-2	
		8GH 008 358-181	1	12	55	PGJ19-2	Blue Light
S1							
		8GD 008 897-061	1	6	25/25	BA20d	symmetrical
		8GD 008 897-121	1	12	25/25	BA20d	
S2							
		8GD 008 898-061	1	6	35/35	BA20d	
		8GD 002 084-131	1	12	35/35	BA20d	
		8GD 002 084-151	1	12	45/40	BA20d	

*Lamps to be used with electrical ballast units for 12 V and 24 V vehicles

12 V		V	W		i

S3

8GA 008 899-061	10	6	15	P26s	
8GA 008 899-121	10	12	15	P26s	

F2

8GA 002 083-131	1	12	35	BA20s	

P21W

8GA 002 073-121	10	12	21	BA15s	

P21/5W

8GD 002 078-121	10	12	21/5	BAY15d	

12 V		V	W		i

T4W

8GP 002 067-061	10	6	4	BA9s	
8GP 002 067-121	10	12	4	BA9s	

R

8GA 002 072-121	10	12	18	BA15s	

R5W

8GA 002 071-121	10	12	5	BA15s	

R10W

8GA 002 071-131	10	12	10	BA15s	

12 V		V	W		i
K					
	8GM 002 091-121	10	12	18	SV8.5-8	approx. 15.5/40 mm
	8GM 002 091-141	10	12	15	SV8.5-8	approx. 15.5/40 mm
C5W					
	8GM 002 092-121	10	12	5	SV8.5-8	approx. 11/35 mm
W3W					
	8GP 003 594-141	10	12	3	W2.1x9.5d	
W5W					
	8GP 003 594-121	10	12	5	W2.1x9.5d	

12 V		V	W		i
W5;1,2W/2,3W					
	8GP 002 095-121	10	12	1,2	W2x4.6d	

A LIBERDADE PARA FAZER O QUE DEVE SER FEITO

Uma agricultura de sucesso não pode ser realizada da noite para o dia. Mas o mesmo não se aplica a uma colheita. As soluções de luz eficazes HELLA ajudam-no a superar os desafios.

A HELLA, o seu parceiro forte no segmento da iluminação, complementarmente à iluminação padrão dispõe de uma vasta gama de faróis de trabalho qualitativos, nas mais diversas tecnologias.

Também no segmento da agricultura, a HELLA tem sempre a lâmpada mais adequada na qualidade OE. Uma gama completa para todos os faróis de trabalho HELLA de halogéneo e xénon, mas também para as aplicações padrão como, por exemplo, faróis principais, luzes de pisca, luzes do habitáculo e muito mais.

www.hella.com/agriculture

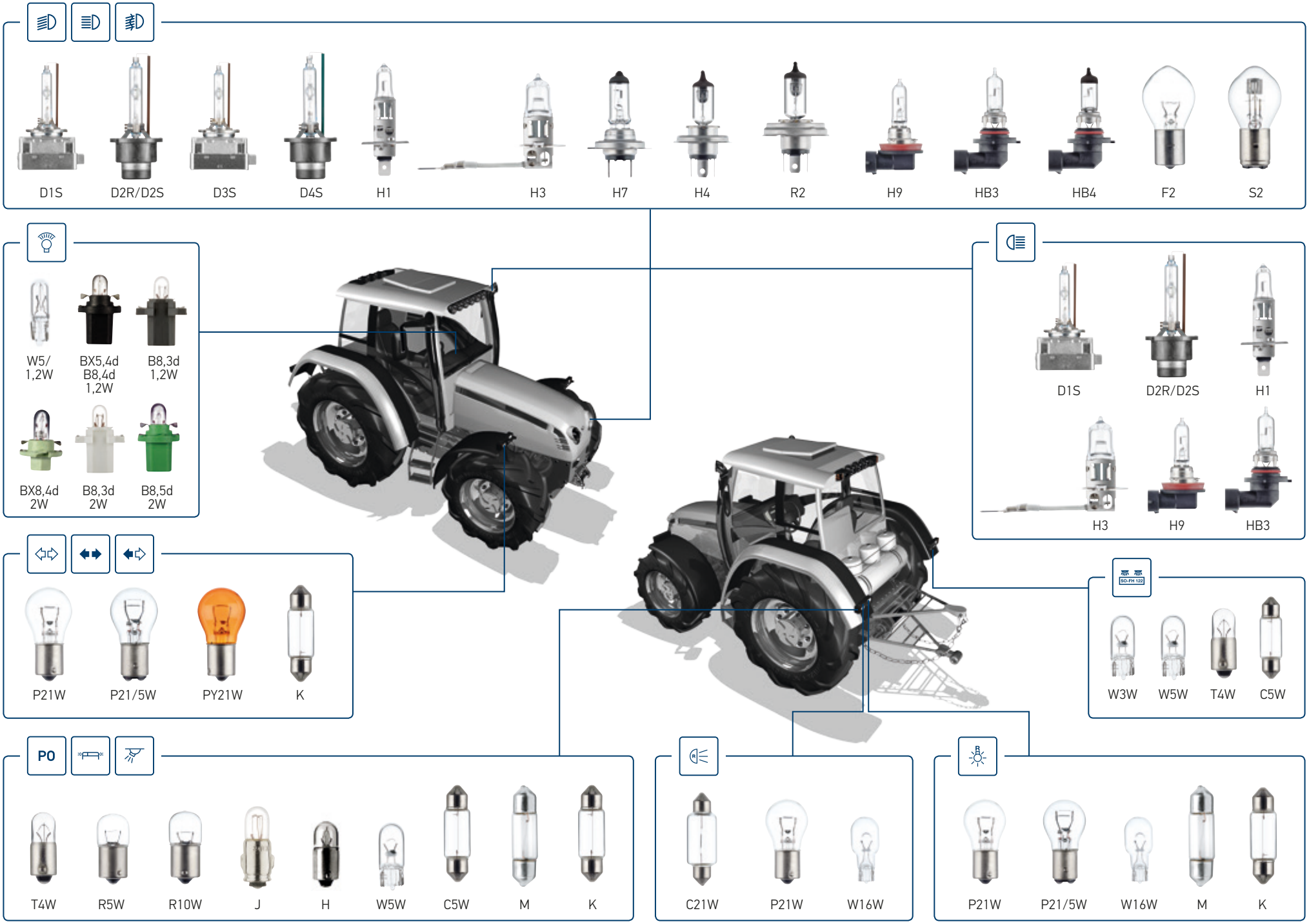
D1S
D2R/D2S
D3S
D4S
H1
H3
H7
H4
R2
H9
HB3
HB4
F2
S2
W5/ 1,2W
BX5,4d B8,4d 1,2W
B8,3d 1,2W
BX8,4d 2W
B8,3d 2W
B8,5d 2W
D1S
D2R/D2S
H1
H3
H9
HB3
P21W
P21/5W
PY21W
K
SO-FH 122
W3W
W5W
T4W
C5W
PO
T4W
R5W
R10W
J
H
W5W
C5W
M
K
C21W
P21W
W16W
P21W
P21/5W
W16W
M
K

12 V / 24 V			V	W		i
D1S						
	8GS 009 028-111	1	85*	35	PK32d-2	4.300K
	8GS 009 028-621	1	85*	35	PK32d-2	5.000K | +30%
D2S						
	8GS 007 949-261	1	85*	35	P32d-2	4.300K
	8GS 007 949-251	1	85*	35	P32d-2	5.000K | +30%
D2R						
	8GS 007 001-151	1	85*	35	P32d-3	4.300K
	8GS 007 001-241	1	85*	35	P32d-3	5.000K | +30%
D3S						
	8GS 009 028-311	1	42*	35	PK32d-5	Free of Mercury
D4S						
	8GS 007 949-311	1	42*	35	P32d-5	Free of Mercury

12 V / 24 V			V	W		i
H1						
	8GH 002 089-131	1	12	55	P14.5s	
	8GH 002 089-251	1	24	70	P14.5s	
H3						
	8GH 002 090-131	1	12	55	PK22s	
	8GH 002 090-251	1	24	70	PK22s	
H4						
	8GJ 002 525-131	1	12	60/55	P43t	
	8GJ 002 525-251	1	24	75/70	P43t	
H7						
	8GH 007 157-121	1	12	55	PX26d	
	8GH 007 157-241	1	24	70	PX26d	
H9						
	8 GH 008 357-001	1	12	65	PGJ19-5	

* Lamps to be used with electrical ballast units for 12 V and 24 V vehicles

12 V / 24 V		V	W		i
HB3					
8GH 005 635-121	1	12	60	P20d	
HB4					
8GH 005 636-121	1	12	51	P22d	
R2					
8GD 002 088-141	1	12	45/40	P45t	Halogen
8GJ 004 173-121	1	12	60/55	P45t	Halogen
8GD 002 088-271	1	24	55/50	P45t	Halogen
S2					
8GD 002 084-131	1	12	35/35	BA20d	
8GD 002 084-151	1	12	45/40	BA20d	
J					
8GP 002 066-121	10	12	2	BA7s	
8GP 002 066-241	10	24	3	BA7s	

12 V / 24 V		V	W		i
H					
8GP 002 068-121	10	12	2	BA9s	
8GP 002 068-131	10	12	3	BA9s	
8GP 002 068-241	10	24	2	BA9s	
T4W					
8GP 002 067-121	10	12	4	BA9s	
8GP 002 067-241	10	24	4	BA9s	
R5W					
8GA 002 071-121	10	12	5	BA15s	
8GA 002 071-241	10	24	5	BA15s	
R10W					
8GA 002 071-131	10	12	10	BA15s	
8GA 002 071-251	10	24	10	BA15s	
R					
8GA 002 072-121	10	12	18	BA15s	
8GA 002 072-241	10	24	18	BA15s	

12 V / 24 V		V	W		i
P21W					
8GA 002 073-121	10	12	21	BA15s	
8GA 002 073-281	10	12	21	BA15d	dualpole
8GA 002 073-241	10	24	21	BA15s	
PY21W					
8GA 006 841-121	10	12	21	BAU15s	Amber
P21/5W					
8GD 002 078-121	10	12	21/5	BAY15d	
8GD 002 078-241	10	24	21/5	BAY15d	
F2					
8GA 002 083-131	1	12	35	BA20s	

12 V / 24 V		V	W		i
K					
8GM 002 091-121	10	12	18	SV8.5-8	approx. 15.5/40 mm
8GM 002 091-131	10	12	10	SV8.5-8	approx. 11/40 mm
8GM 002 091-141	10	12	15	SV8.5-8	approx. 15.5/40 mm
8GM 002 091-241	10	24	18	SV8.5-8	approx. 15.5/40 mm
8GM 002 091-251	10	24	10	SV8.5-8	approx. 11/40 mm
C5W					
8GM 002 092-121	10	12	5	SV8.5-8	approx. 11/35 mm
8GM 002 092-241	10	24	5	SV8.5-8	approx. 11/35 mm
C21W					
8GM 002 091-181	?	12	21	SV8.5-8	approx. 15/40 mm
M					
8GM 002 094-121	10	12	3	SV7-8	approx. 8.2/30 mm
8GM 002 094-241	10	24	3	SV7-8	approx. 8.2/30 mm

12 V / 24 V		V	W		i
W5/1,2W					
8GP 002 095-121	10	12	1,2	W2x4.6d	
8GP 002 246-241	10	24	1,2	W2x4.6d	
W3W					
SM PO 8GP 003 594-141	10	12	3	W2.1x9.5d	
W5W					
PO 8GP 003 594-121	10	12	5	W2.1x9.5d	
PO 8GP 003 594-251	10	24	5	W2.1x9.5d	
W16W					
8GA 008 246-001	10	12	16	W2.1x9.5d	

12 V / 24 V		V	W		i
Plastic Socket Lamps					
8GA 007 997-121	10	12	1,2	BX8.4d	black
8GA 007 997-041	10	12	1,2	B8.3d	black, contact at the bottom
8GS 007 677-121	10	12	2	BX8.4d	white-green
8GA 007 997-001	10	12	2	B8.3d	white
8GA 007 997-081	10	12	2	B8.5d	green

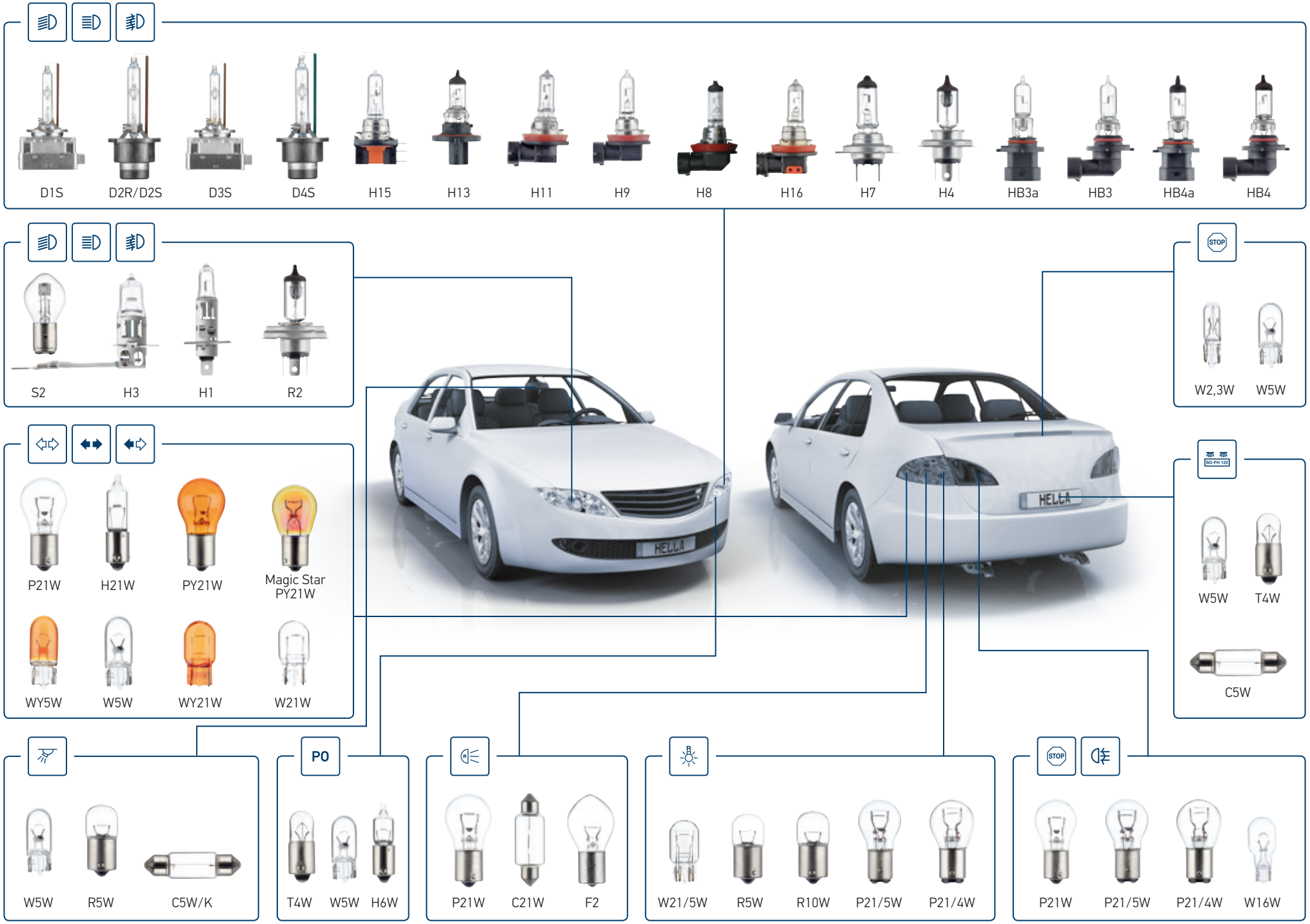
D1S
D2R/D2S
D3S
D4S
H15
H13
H11
H9
H8
H16
H7
H4
HB3a
HB3
HB4a
HB4
S2
H3
H1
R2
W2,3W
W5W
P21W
H21W
PY21W
Magic Star PY21W
WY5W
W5W
WY21W
W21W
W5W
T4W
C5W
HELLA
W5W
R5W
C5W/K
PO
T4W
W5W
H6W
P21W
C21W
F2
W21/5W
R5W
R10W
P21/5W
P21/4W
P21W
P21/5W
P21/4W
W16W

12 V			V	W		i
D1S						
	8GS 009 028-111	1	85*	35	PK32d-2	4.300K
	8GS 009 028-621	1	85*	35	PK32d-2	5.000K | +30%
D2S						
	8GS 007 949-261	1	85*	35	P32d-2	4.300K
	8GS 007 949-251	1	85*	35	P32d-2	5.000K | +30%
D2R						
	8GS 007 001-151	1	85*	35	P32d-3	4.300K
	8GS 007 001-241	1	85*	35	P32d-3	5.000K | +30%
D3S						
	8GS 009 028-311	1	42*	35	PK32d-5	4.300K Free of Mercury

12 V			V	W		i
D4S						
	8GS 007 949-311	1	42*	35	P32d-5	4.300K Free of Mercury
H1						
	8GH 002 089-131	1	12	55	P14.5s	
	8GH 002 089-141	1	12	55	P14.5s	Blue Light
	8GH 002 089-351	1	12	55	P14.5s	Long Life
	8GH 002 089-471	1	12	55	P14.5s	+50
	8GH 002 089-531	1	12	55	P14.5s	+90
	8GH 178 560-471	1	12	55	P14.5s	+120
H3						
	8GH 002 090-131	1	12	55	PK22s	
	8GH 002 090-271	1	12	35	PK22s	Low Wattage Lamp
	8GH 002 090-371	1	12	55	PK22s	Blue Light
H4						
	8GJ 002 525-131	1	12	60/55	P43t	
	8GJ 002 525-361	1	12	60/55	P43t	Blue Light
	8GJ 002 525-481	1	12	60/55	P43t	Long Life
	8GJ 002 525-891	1	12	60/55	P43t	Super Long Life
	8GJ 002 525-301	1	12	60/55	P43t	Heavy Duty
	8GJ 002 525-001	1	12	60/55	P43t	+30/Long Life
	8GJ 002 525-471	1	12	60/55	P43t	+50
	8GJ 002 525-531	1	12	60/55	P43t	+90
	8GJ 178 560-481	1	12	60/55	P43t	+120
	8GJ 002 525-981	1	12	60/55	P43ts	Chrome Top 2.0

*Lamps to be used with electrical ballast units for 12 V and 24 V vehicles

12 V			V	W		i

R2

	8GD 002 088-141	1	12	45/40	P45t	Halogen
	8GJ 004 173-121	1	12	60/55	P45t	Halogen

H7

	8GH 007 157-121	1	12	55	PX26d	
	8GH 007 157-181	1	12	55	PX26d	Blue Light
	8GH 007 157-201	1	12	55	PX26d	Long Life
	8GH 007 157-451	1	12	55	PX26d	Super Long Life
	8GH 007 157-471	1	12	55	PX26d	+50
	8GH 007 157-531	1	12	55	PX26d	+90
	8GH 178 560-491	1	12	55	PX26d	+120
	8GH 007 157-551	1	12	55	PX26d	Chrome Top 2.0

H8

	8GH 008 356-121	1	12	35	PGJ19-1	
	8GH 008 356-181	1	12	35	PGJ19-1	Blue Light

H9

	8GH 009 063-121	1	12	42	PY20d	

12 V			V	W		i

H10

	8GH 008 357-001	1	12	65	PGJ19-5	

H11

	8GH 008 358-121	1	12	55	PGJ19-2	
	8GH 008 358-181	1	12	55	PGJ19-2	Blue Light

H11b

	8GH 008 358-141	1	12	55	PGJY19-2	

H13

	8GJ 008 837-121	1	12	60/55	P26-4t	

H15

	8GJ 168 119-001	1	12	55/15	PGJ 23t-1	

12 V		V	W		i

H16

8GH 186 996-011	1	12	16	PGJ19-3

HB1 (9004)

8GJ 004 907-123	1	12	65/45	P29t

HB2 (9003)

8GJ 007 255-123	1	12	60/55	P43t

HB3 (9005)

8GH 005 635-121	1	12	60	P20d

HB3a (9006xs)

8GH 005 635-161	1	12	60	P20d

12 V		V	W		i

HB5 (9007)

8GJ 178 555-343	1	12	65/55	PX29t

HB4 (9006)

8GH 005 636-121	1	12	51	P22d

HB4a (9006xs)

8GH 005 636-201	1	12	51	P22d

HS1

8GJ 329 393-043	1	12	35/35	PX43t

S1

8GD 008 897-061	1	6	25/25	BA20d	symmetrical
8GD 008 897-121	1	12	25/25	BA20d	

12 V			V	W		i
S2						
	8GD 008 898-061	1	6	35/35	BA20d	
	8GD 002 084-131	1	12	35/35	BA20d	
	8GD 002 084-151	1	12	45/40	BA20d	
S3						
	8GA 008 899-061	10	6	15	P26s	
	8GA 008 899-121	10	12	15	P26s	
F2						
	8GA 002 083-131	1	12	35	BA20s	
P21W						
	8GA 002 073-121	10	12	21	BA15s	
	8GA 002 073-271	10	12	21	BA15s	Long Life
PY21W						
	8GA 006 841-121	10	12	21	BAU15s	Amber
	8GA 006 841-801	2	12	21	BAU15s	Magic Star/Set

12 V			V	W		i
P21/4W						
	8GD 004 772-121	10	12	21/4	BAY15d	
	8GD 004 772-151	10	12	21/4	BAY15d	Long Life
P27W (3156)						
	8GA 007 731-231	10	12	27	W2.5x16d	
P21/5W						
	8GD 002 078-121	10	12	21/5	BAY15d	
	8GD 002 078-221	10	12	21/5	BAY15d	Long Life
T4W						
	8GP 002 067-061	10	6	4	BA9s	
	8GP 002 067-121	10	12	4	BA9s	
T6W						
	8GP 007 676-121	10	12	6	BA9s	

12 V		V	W		i

H5W

8GH 002 473-151	1	12	5	BA9s	

H6W

8GH 007 643-121	10	12	6	BAX9s	
8GH 007 643-171	10	12	6	BAX9s	Long Life

H10W

8GH 002 473-191	10	12	10	BA9s	

H20W

8GH 002 473-132	1	12	20	BA9s	

12 V		V	W		i

H21W

8GH 008 417-001	1	12	21	BAY9s	Long Life

R

8GA 002 072-121	10	12	18	BA15s	

R5W

8GA 002 071-121	10	12	5	BA15s	

R10W

8GA 002 071-131	10	12	10	BA15s	

12 V		V	W		i
K					
8GM 002 091-121	10	12	18	SV8.5-8	approx. 15.5/40 mm
8GM 002 091-131	10	12	10	SV8.5-8	approx. 11/40 mm
8GM 002 091-141	10	12	15	SV8.5-8	approx. 15.5/40 mm
M					
8 GM 002 094-121	10	12	3	SV7-8	approx. 8.2/30 mm
C5W					
8GM 002 092-121	10	12	5	SV8.5-8	approx. 11/35 mm
8GM 002 092-171	10	12	5	SV8.5-8	Long Life, approx. 11/35 mm
C21W					
8GM 002 091-181	10	12	21	SV8.5-8	approx. 15.5/40 mm

12 V		V	W		i
W3W					
8GP 003 594-141	10	12	3	W2.1x9.5d	
W5W					
8GP 003 594-121	10	12	5	W2.1x9.5d	
8GP 003 594-261	1	12	5	W2.1x9.5d	Blue Light
WY5W					
8GP 003 594-541	10	12	5	W2.1x9.5d	
W16W					
8GA 008 246-001	10	12	16	W2.1x9.5d	

12 V			V	W		i
W21W						
		8GA 008 892-002	10	12	21	W3x16d
WY21W						
		8GA 009 021-002	10	12	21	W3x16d
W21/5W						
		8GD 008 893-002	10	12	21/5	W3x16q
W5;1,2W/2,3W						
		8GP 002 095-121	10	12	1,2	W2x4.6d
		8GP 938 026-001	10	12	2,3	W2x4.6d

12 V		V	W		i
LED Retrofit (Festoon 36 mm)					
	8GL 178 560-551	1	12	1	SV8,5-8	4000 K
	8GL 178 560-561	1	12	1	SV8,5-8	5000 K
LED Retrofit (Festoon 41 mm)						
	8GL 178 560-571	1	12	1	SV8,5-8	4000 K
	8GL 178 560-581	1	12	1	SV8,5-8	5000 K
LED Retrofit T10						
	8GL 178 560-591	2	12	1	W2,1x9,5d	4000 K
	8GL 178 560-601	2	12	1	W2,1x9,5d	5000 K

Plastic Socket Lamps

12 V		V	W		i
8GA 007 997-151	10	12	0,4	BX8.5d	blue-violet
8GA 007 997-171	10	12	1,1	BX8.4d	orange
8GA 007 997-011	10	12	1,2	W2x4.6d	white
8GA 007 997-031	10	12	1,2	B8.5d	black
8GA 007 997-041	10	12	1,2	B8.3d	black, contacts at the bottom

12 V		V	W		i
8GA 007 997-051	10	12	1,2	B8.7d	grey
8GA 007 997-121	10	12	1,2	BX8.4d	black
8GA 007 997-211	10	12	1,2	BX8.5d	light-blue
8GA 007 997-231	10	12	1,2	BG8.5-5.5d	black
8GA 007 997-241	10	12	1,2	BG8.5-5.5d	black

12 V		V	W		i
	8GA 007 997-251	10	12	1,2	BG8.5-S/40	black
	8GA 007 997-131	10	12	1,3	BX8.4d	green
	8GA 007 997-141	10	12	1,5	BX8.4d	beige
	8GA 007 997-161	10	12	1,5	B8.5d	beige
	8GA 007 997-001	10	12	2	B8.3d	white

12 V		V	W		i
	8GA 007 997-081	10	12	2	B8.5d	greenbeige
	8GA 007 997-091	10	12	2	B8.7d	green
	8GA 007 997-221	10	12	2	BX8.5d	light-green
	8GA 007 997-101	10	12	3	B10d	brown/miniature halogen

ALFA ROMEO													
ALFA 145 (930) 07/94 → 01/01	H1	H1	H3		P21W / PY21W	W5W	W5W	W5W	P21/5W	P21/5W	P21W	P21W	W5W
ALFA 146 (930) 07/94 → 01/01	H1	H1	H3		P21W / PY21W	W5W	W5W	W5W	P21/5W	P21/5W	P21W	P21W	W5W
ALFA 147 (937) 01/01 → 04	H7	H7	H1		P21W / PY21W	W5W	H6W	W2,3W	P21/5W	P21/5W	P21W	P21W	W5W
ALFA 147 (937) 01/01 → 04 XENON	D2S	H7	H1		P21W / PY21W	W5W	H6W	W2,3W	P21/5W	P21/5W	P21W	P21W	W5W
ALFA 147 (937) 05 → 03/10	H7	H1	H3		P21W / PY21W	W5W	H6W	W2,3W	P21/5W	P21/5W	P21W	P21W	W5W
ALFA 147 (937) 05 → 03/10 XENON	D2S	H1	H3		P21W / PY21W	W5W	H6W	W2,3W	P21/5W	P21/5W	P21W	P21W	W5W
ALFA 155 (167) 01/92 → 12/97	H1	H1	H3		P21W / P21W	-	W5W		P21W	R5W	P21W	P21W	W5W
ALFA 156 (932) 09/97 → 09/05	H7	H1	H1		P21W / PY21W	W5W	H6W	W2,3W	P21/5W	P21/5W	P21W	P21W	W5W
ALFA 156 (932) 09/97 → 09/05 XENON	D2S	H1	H1		P21W / PY21W	W5W	H6W		P21/5W	P21/5W	P21W	P21W	W5W
ALFA 156 Sportwagon (932) 05/00 → 05/06	H7	H1	H1		P21W / PY21W	W5W	H6W		P21/5W	P21/5W	P21W	P21W	W5W
ALFA 156 Sportwagon (932) 05/00 → 05/06 XENON	D2S	H1	H1		P21W / PY21W	W5W	H6W		P21/5W	P21/5W	P21W	P21W	W5W
ALFA 159 (939) 09/05 → 11/11	H7	H7	H1		P21W / PY21W	WY5W	W5W	W2,3W	P21/5W	P21/5W	P21W	P21W	W5W
ALFA 159 (939) 09/05 → 11/11 XENON	D1S	H1	H1		P21W / PY21W	WY5W	W5W	W2,3W	P21/5W	P21/5W	P21W	P21W	W5W
ALFA 159 (939) Sportwagon 03/06 → 11/11	H7	H7	H1		P21W / PY21W	WY5W	W5W	W2,3W	P21/5W	P21/5W	P21W	P21W	W5W
ALFA 159 (939) Sportwagon 03/06 → 11/11 XENON	D1S	H1	H1		P21W / PY21W	WY5W	W5W	W2,3W	P21/5W	P21/5W	P21W	P21W	W5W
ALFA 164 (164) 09/92 → 09/98	H1	H1	H3		PY21W / PY21W	-	W5W		P21/5W	P21/5W	P21W	P21W	R10W
ALFA 166 (936) 09/98 → 06/07	H7	HB3	H3		PY21W / PY21W	WY5W	H6W		P21/5W	P21/5W	P21W	P21W	W5W
ALFA 166 (936) 09/98 → 06/07 XENON	D2S	HB3	H3		PY21W / PY21W	WY5W	H6W		P21/5W	P21/5W	P21W	P21W	W5W
BRERA 01/06 →	H7	H7	H1		P21W / PY21W	W5W	W5W		P21/5W	P21/5W	P21W	P21W	W5W
BRERA 01/06 → BI-XENON	D1S	H1	H1		P21W / PY21W	W5W	W5W		P21/5W	P21/5W	P21W	P21W	W5W
GIULIETTA (940) 04/10 →	H7	H1	H3		R10W	LED			LED	H21W	H21W	P21W	W5W
GIULIETTA (940) 04/10 → BI-XENON	D1S	H1	H3		R10W	LED			LED	H21W	H21W	P21W	W5W
GT (937) 11/03 → 09/10	H7	H7	H1		H21W / H21W	LED	H6W		P21/5W	P21/5W	H21W	H21W	W5W
GT (937) 11/03 → 09/10 XENON	D2S	H7	H1		H21W / H21W	LED	H6W		P21/5W	P21/5W	H21W	H21W	W5W
GTV (916C) 09/94 → 10/05	HB3	HB3	H3		P21W / PY21W		W5W	W5W	P21/5W	P21/5W	P21W	P21W	W5W
MITO (955) 09/08 →	H7	H7	H1	W21/5W	WY21W / LED	LED	W21/5W		LED	LED	P21W	P21W	W5W
MITO (955) 09/08 → BI-XENON	D1S	H7	H1	W21/5W	WY21W / LED	LED	W21/5W		LED	LED	P21W	P21W	W5W
SPIDER (916S) 09/94 → 04/05	HB3	HB3	H3		P21W / PY21W	WY5W	W5W		P21/5W	P21/5W	P21W	P21W	W5W
SPIDER (939) 09/06 →	H7	H7	H1		PY21W / WY5W		W5W		P21W	P21W	P21W	P21W	W5W
SPIDER (939) 09/06 → BI-XENON	D1S	H1	H1		PY21W / WY5W		W5W		P21W	P21W	P21W	P21W	W5W
AUDI													
A1 (8X1) 05/10 → 11/14	H7	H1	H11		LED	W16W	W21W		P21W	P21W	P21W	W16W	C5W
A1 (8X1) 05/10 → 11/14 BI-XENON	D3S	D3S	H11		LED	W16W	W21W		P21W	P21W	P21W	W16W	C5W
A1 Sportback (8XA) 11/11 →11/14	H7	H1	H11		LED	W16W	W21W		P21W	P21W	P21W	W16W	C5W
A1 Sportback (8XA) 11/11 →11/14 BI-XENON	D3S	D3S	H11		LED	W16W	W21W		P21W	P21W	P21W	W16W	C5W
A2 (8Z0) 02/00 → 08/05	H7	H3	H7		PY21W / PY21W	WY5W	W5W		P21/5W	P21/5W	P21W	P21W	C5W
A3 (8L1) 09/96 → 05/03 dual reflector	H7	H1	H7		P21W / PY21W	W5W	W5W		P21/5W	P21/5W	P21W	P21W	C5W
A3 (8L1) 09/96 → 05/03 triple reflector	H7	H4	H4		P21W / PY21W		W5W		P21/5W	P21/5W	P21W	P21W	C5W
A3 (8L1) 09/96 → 05/03 XENON	D2S	H7	H7		P21W / PY21W		W5W		P21/5W	P21/5W	P21W	P21W	C5W
A3 (8P1) 05/03 → 06/08	H7	H7	H7		PY21W / PY21W	WY5W	W5W		P21W	R10W	H21W	P21W	C5W
A3 (8P1) 05/03 → 06/08 XENON	D2S	H7	H7		PY21W / PY21W		W5W		P21W	R10W	H21W	P21W	C5W
A3 (8P1) 07/08 → 08/12	H7	H7	H7		PY21W / PY21W	WY5W	W5W		P21W	R10W	H21W	P21W	C5W
A3 (8P1) 07/08 → 08/12 BI-XENON	D3S	D3S	H7		PY21W / PY21W		W5W		P21W	R10W	H21W	P21W	C5W
A3 (8V1) 04/12 →	H7	H15	H8	H15	PY21W	LED	W5W		W21W	W21W	W16W	H6W	LED
A3 (8V1) 04/12 → BI-XENON	D3S	D3S	H8	LED	LED / LED	LED	LED		LED	LED	W16W	W16W	LED
A3 Convertible (8P7) 04/08 → 05/13	H7	H7	H11		P21W / P21W		LED		P21W	LED	P21W	LED	C5W
A3 Convertible (8P7) 04/08 → 05/13 XENON	D3S	D3S			P21W / P21W		LED		P21W	LED	P21W	LED	C5W

A3 Convertible (8V7) 10/13 →	H7	H15	H8	H15	LED / RY10W		W5W		W21W	W21W	W16W	H6W	LED
A3 Convertible (8V7) 10/13 → BI-XENON	D3S	D3S	H8	LED	LED / LED		LED		LED	LED	H21W	W16W	LED
A3 Sedan (8VS) 05/13 →	H7	H15	H8	H15	PY21W	LED	W5W		W21W	W21W	W16W	H6W	LED
A3 Sedan (8VS) 05/13 BI-XENON	D3S	D3S	H8	LED	LED / LED	LED	LED		LED	LED	H21W	W16W	LED
A3 Sportback (8PA) 09/04 → 06/08	H7	H7	H7		PY21W / PY21W		W5W		P21W	P21W	P21W	W16W	C5W
A3 Sportback (8PA) 09/04 → 06/08 XENON	D2S	H7	H7 / H11		PY21W / PY21W		W5W		P21W	P21W	P21W	W16W	C5W
A3 Sportback (8PA) 07/08 → 03/13	H7	H7	H7		PY21W / PY21W	WY5W	W5W		P21W	R10W	H21W	P21W	C5W
A3 Sportback (8PA) 07/08 → 03/13 BI-XENON	D3S	D3S	H7 / H11		PY21W / PY21W		W5W		P21W	R10W	H21W	P21W	C5W
A3 Sportback (8VA) 09/12 →	H7	H15	H8	H15	PY21W	LED	W5W		W21W	W21W	W21W	H6W	LED
A3 Sportback (8VA) 09/12 → BI-XENON	D3S	D3S	H8	LED	LED / LED	LED	LED		LED	LED	H21W	W16W	LED
A4 Convertible (8G7, B4) 05/00 → 08/05 SINGLE REFLECTOR	H4	H4			PY21W / PY21W		W5W		P21/5W	P21/5W	P21W	P21W	T4W
A4 Convertible (8G7, B4) 05/00 → 08/05 DUAL REFLECTOR	H1	H1			PY21W / PY21W		W5W		P21/5W	P21/5W	P21W	P21W	T4W
A4 (8D2, B5) 11/94 → 11/00 SINGLE REFLECTOR	H4	H4	H1		P21W / PY21W		T4W	W5W	P21/5W	P21/5W	P21W	P21W	C5W
A4 (8D2, B5) 11/94 → 11/00 DUAL REFLECTOR	H7	H7	H1		P21W / PY21W		T4W	W5W	P21/5W	P21/5W	P21W	P21W	C5W
A4 (8D2, B5) 11/94 → 11/00 XENON	D2S	H7	H1 / H7		P21W / PY21W		T4W	W5W	P21W	W5W	P21W	P21W	C5W
A4 (8E2, B6) 11/00 → 12/04	H7	H7	H11		P21W / PY21W	WY5W	W5W		P21/5W	P21/5W	P21W	P21W	C5W
A4 (8E2, B6) 11/00 → 12/04 XENON	D1S/D2S	H7	H11		PY21W / PY21W	WY5W	H6W		P21/5W	P21/5W	P21W	P21W	C5W
A4 (8EC, 8ED, B7) 11/04 → 06/2008	H7	H7	H11		PY21W / PY21W		W5W		P21W	P21W	P21W	P21W	C5W
A4 (8EC, 8ED, B7) 11/04 → 06/2008 BI-XENON	D1S	D1S	H11		P21W/P21W		W5W		P21W	P21W	P21W	P21W	C5W
A4 (8H7, B6, 8HE, B7) Convertible 04/02 → 03/09	H7	H7	H11		PY21W / PY21W	WY5W	W3W		P21/4W	P21/4W	P21W	P21W	C5W
A4 (8H7, B6, 8HE, B7) Convertible 04/02 → 03/09 XENON	D2S	H9	H11		PY21W / PY21W	WY5W	W3W		P21/4W	P21/4W	P21W	P21W	C5W
A4 (8K2, B8) 11/07 →	H7	H7	H11 / H8		P21W		LED		LED	LED	H21W	W16W	C5W
A4 (8K2, B8) 11/07 → BI-XENON	D3S	D3S	H11 / H8	LED	P21W		LED		LED	LED	H21W	W16W	C5W
A4 Avant (8K5, B8) 04/08 →	H7	H7	H11 / H8		PY21W / PY21W		LED		W16W	W16W	H21W	W16W	C5W
A4 Avant (8K5, B8) 04/08 → BI-XENON	D3S	D3S	H11 / H8	LED	PY21W / PY21W		LED		W16W	W16W	H21W	W16W	C5W
A4 Allroad (8KH, B8) 04/09 →	H7	H7	H11		PY21W		LED		P21W	P21W	H21W	W16W	C5W
A4 Allroad (8KH, B8) 04/09 → BI-XENON	D3S	D3S	H11	LED	PY21W		LED		P21W	P21W	H21W	W16W	C5W
A5 (8T3) 06/07 →	H7	H7	H11		H21W	W16W	W5W		P21W	P21W	P21W/ H21W	W16W	C5W
A5 (8T3) 06/07 → BI-XENON	D3S	D3S	H11 / H8		H21W	W16W	W5W		P21W	P21W	P21W/ H21W	W16W	C5W
A5 Cabriolet (8F7) 03/09 →	H7	H7	H11		H21W	W16W	W5W		LED	LED	P21W/ H21W	W16W	C5W
A5 Cabriolet (8F7) 03/09 → BI-XENON	D3S	D3S	H11 / H8		H21W	LED	W5W		LED	LED	P21W/ H21W	W16W	C5W
A5 Sportback (8TA) 09/09 →	H7	H7	H11		H21W	LED	W5W		LED	LED	P21W/ H21W	W16W	C5W
A5 Sportback (8TA) 09/09 → BI-XENON	D3S	D3S	H11 / H8		H21W	LED	W5W		LED	LED	P21W/ H21W	W16W	C5W
A6 (4A, C4) 06/94 → 10/97	H1	H1	H3		P21W / PY21W	W5W	T4W / W5W	W2,3W	P21/5W	P21/5W	P21W	P21W	T4W
A6 (4A, C4) 06/94 → 10/97 XENON	D2S	H1	H3		P21W / PY21W	W5W	T4W / W5W	W2,3W	P21/5W	P21/5W	P21W	P21W	T4W
A6 Avant (4A, C4) 06/94 → 12/97	H1	H1	H3		P21W / PY21W		T4W / W5W	W2,3W	P21/5W	P21/5W	P21W	P21W	T4W
A6 Avant (4A, C4) 06/94 → 12/97 XENON	D2S	H1	H3		P21W / PY21W		T4W / W5W	W2,3W	P21/5W	P21/5W	P21W	P21W	T4W
A6 (4B, C5) 01/97 → 01/05	H7	H7	H3		P21W / PY21W	WY5W	W5W	W2,3W	P21/5W	P21/5W	P21W	P21W	C5W
A6 (4B, C5) 01/97 → 01/05 XENON	D1S	H7	H3		P21W / PY21W	WY5W	W5W	W5W	P21/5W	P21/5W	P21W	P21W	C5W
A6 Avant (4B, C5) 02/97 → 12/01	H1	H7	H3		P21W / PY21W		W5W	W2,3W	P21/5W	P21/5W	P21W	P21W	C5W
A6 Avant (4B, C5) 01/02 → 02/05	H7	H7	H3		P21W / PY21W		W5W	W2,3W	P21/5W	P21/5W	P21W	P21W	C5W
A6 Avant (4B, C5) 02/97 → 02/05 XENON	D1S	H7	H3		P21W / PY21W		W5W	W2,3W	P21/5W	P21/5W	P21W	P21W	C5W
A6 (4F2, 6FH, C6) 05/04 → 03/11	H7	H1	H7		PY21W / PY21W	WY5W	W5W		P21W	P21W	H21W	P21W	C5W
A6 (4F2, 6FH, C6) 05/04 → 03/11 BI-XENON	D2S	D2S	H7		PY21W / PY21W	WY5W	W5W		P21W	P21W	H21W	P21W	C5W
A6 Avant (4F5, C6) 03/05 → 08/11	H7	H1	H7		PY21W / PY21W	WY5W	W5W		P21W	P21W	H21W	W16W	C5W
A6 Avant (4F5, C6) 03/05 → 08/11 BI-XENON	D3S	D3S	H11		PY21W / PY21W	WY5W	W5W		P21W	P21W	H21W	W16W	C5W

A6 (4G2, C7) 11/10 → 09/14	H7	H15	H11	H15	PY21W / PY21W	LED	W5W		LED	LED	H21W	W16W	C5W
A6 (4G2, C7) 11/10 → 09/14 BI-XENON	D3S	D3S	H11		PY21W / PY21W	LED	W5W		LED	LED	H21W	W16W	C5W
A6 Avant (4G5, C7) 05/11 → 09/14	H7	H15	H11	H15	PY21W / PY21W	WY5W	W5W		LED	LED	P21W	W16W	C5W
A6 Avant (4G5, C7) 05/11 → 09/14 BI-XENON	D3S	D3S	H11		PY21W / PY21W	LED	W5W		LED	LED	P21W	W16W	C5W
A6 (4G2, C7) 09/14 → BI-XENON	D3S	D3S	H7										
A6 Avant (4G5, C7) 09/14 → BI-XENON	D3S	D3S	H7										
A7 Sportback (4GA) 10/10 → BI-XENON	D3S	D3S	H8		LED	LED	LED		LED	LED	LED	W16W	C5W
A8 (4D2, 4D8) 03/94 → 01/99	H1	HB3	H3		P21W / PY21W	W5W / WY5W	H6W	W5W	P21W	R5W	P21W	P21W	C5W
A8 (4D2, 4D8) 03/94 → 01/99 XENON	D2S	HB3	H7		P21W / PY21W	W5W / WY5W	H6W	W5W	P21W	R5W	P21W	P21W	C5W
A8 (4D2, 4D8) 01/99 → 09/02	H1	H7	H3		P21W / PY21W	W5W / WY5W	W5W	W5W	P21/5W	P21/5W	P21W	P21W	C5W
A8 (4D2, 4D8) 01/99 → 09/02 XENON	D2S	H7	H7		P21W / PY21W	W5W / WY5W	W5W	W5W	P21/5W	P21/5W	P21W	P21W	C5W
A8 (4E_) 10/02 → 07/10	H7	H7	H11		P21W	W5W / WY5W	W5W		LED	LED	LED	W16W	C5W
A8 (4E_) 10/02 → 07/10 XENON	D2S	H7	H11		P21W	LED	W5W		LED	LED	LED	W16W	C5W
A8 (4H_) 11/09 → BI-XENON	D3S	D3S	H7		LED	LED			LED	LED	LED	W16W	C5W
ALLROAD (4BH, C5) 05/00 → 08/05	H1	H9	H7		PY21W / P21W		W5W		P21/5W	P21/5W	P21W	P21W	C5W
ALLROAD (4BH, C5) 05/00 → 08/05 BI-XENON	D2S	H9	H7		P21W / PY21W		W5W		P21/5W	P21/5W	P21W	P21W	C5W
Q3 06/11 →	H7	H7	H11	W21W	P21W / PY21W	W5W	W21W		P21W	W16W	W16W	W16W	
Q3 06/11 → BI-XENON	D3S	D3S	H11	LED	P21W / PY21W	W5W	W21W		P21W	W16W	W16W	W16W	
Q5 (8R) 11/08 →	H7	H7	H11		P21W / PY21W		W5W		P21W	W16W	W16W	P21W	C5W
Q5 (8R) 11/08 → BI-XENON	D3S	D3S	H11	LED	P21W / PY21W		W5W		P21W	W16W	W16W	P21W	C5W
Q7 (4L) 03/06 →	H7	H15	H7 / H11	H15	H21W / P21W		W5W		P21W	P21W	H21W	W16W	C5W
Q7 (4L) 03/06 → BI-XENON	D1S	D1S	H7 / H11	LED	H21W / P21W		W5W		P21W	P21W	H21W	W16W	C5W
R8 04/07 → BI-XENON	D1S	D1S			PY21W					W16W	P21W	H21W	C5W
R8 Spyder 02/10 → BI-XENON	D1S	D1S			PY21W					W16W	P21W	H21W	C5W
TT (8N3) 10/98 → 06/06	H1	H7	H3		H21W / P21W	WY5W	H6W		P21/5W	P21/5W	P21W	P21W	C5W
TT (8N3) 10/98 → 06/06 BI-XENON	D2S	D2S	H3		H21W / P21W	WY5W	H6W		P21/5W	P21/5W	P21W	P21W	C5W
TT Roadster (8N9) 10/99 → 06/06	H1	H7	H3		H21W / P21W	WY5W	H6W		P21/5W	P21/5W	P21W	P21W	C5W
TT Roadster (8N9) 10/99 → 06/06 BI-XENON	D2S	D2S	H3		H21W / P21W	WY5W	H6W		P21/5W	P21/5W	P21W	P21W	C5W
TT (8J3) 08/06 → 06/14	H7	H7	H11		H21W / PY21W	W16W	W5W		H6W	P21W	H21W	W16W	C5W
TT (8J3) 08/06 → 06/14 BI-XENON	D1S	D1S	H11		H21W / PY21W	W16W	W5W		H6W	P21W	H21W	W16W	C5W
TT Roadster (8J9) 03/07 → 06/14	H7	H7	H11		H21W / PY21W		W5W		H6W	P21W	H21W	W16W	C5W
TT Roadster (8J9) 03/07 → 06/14 BI-XENON	D1S	D1S	H11		H21W / PY21W		W5W		H6W	P21W	H21W	W16W	C5W
80 V (8C, B4) 09/91 → 12/94	H4	H1	H3		P21W / P21W	-	T4W		P21/5W	P21/5W	P21W	P21W	T4W
80 V Avant (8C, B4) 09/91 → 01/96	H4	H1	H3		P21W / PY21W	-	T4W		P21/5W	P21/5W	P21W	P21W	T4W
BMW													
1 (E81, E87) 09/04 → 09/12	H7	H7	H11		PY21W / PY21W	WY5W	W5W		P21W	P21W	P21W	P21W	W5W
1 (E81, E87) 09/04 → 09/12 BI-XENON	D1S	D1S	H11	H8	PY21W / PY21W	WY5W	H8		P21W	P21W	P21W	P21W	W5W
1 (F20, F21) 11/10 → 03/15	H7	H7	H8	W21W	PY21W		H6W		P21W	P21W	P21W	P21W	LED
1 (F20, F21) 11/10 → 03/15 BI-XENON	D1S	D1S	H8		PY21W		H6W		P21W	P21W	P21W	P21W	LED
1 (E82) Coupe 10/07 →	H7	H7	H11		PY21W / PY21W		W5W		P21W	P21W	H21W	W16W	LED
1 (E82) Coupe 10/07 → BI-XENON	D1S	D1S	H11	H8	PY21W / PY21W		H8		P21W	P21W	H21W	W16W	LED
1 (E88) Convertible 03/08 →	H7	H7	H11		PY21W / PY21W	WY5W	W5W		P21W	P21W	H21W	W16W	LED
1 (E88) Convertible 03/08 → BI-XENON	D1S	D1S	H11	H8	PY21W / PY21W	WY5W	H8		P21W	P21W	H21W	W16W	LED
2 Coupe (F22) 10/13 →	H7	H15	H8 / H11	H15	PY21W / PY21W	-	H6W		P21W	LED	H21W	P21W	LED
2 Coupe (F22) 10/13 → BI-XENON	D1S	D1S	H8 / H11	H15	PY21W / PY21W	-	LED		P21W	LED	H21W	P21W	LED
2 Convertible (F23) 11/14 →	H7	H15	H8 / H11	H15	PY21W / PY21W	-	H6W		P21W	LED	H21W	P21W	LED

2 Convertible (F23) 11/14 → BI-XENON	D1S	D1S	H8 / H11	H15	PY21W / PY21W	-	LED		P21W	LED	H21W	P21W	LED
2 Gran Tourer 03/15 →	H7	H7	H8		PY21W / P21W				P21W	P21W	P21W	P21W	LED
3 (E36) 09/90 → 02/98 I	H1	H1	H1		P21W / PY21W	W5W	W5W	P21W	P21W	P21/4W	P21/4W	P21W	C5W
3 (E36) 09/90 → 02/98 II	H7	H7	H1		P21W / PY21W	WY5W	W5W	P21W	P21W	R5W	P21W	P21W	C5W
3 (E36) Compact 03/94 → 08/00 I	HB4	HB3	H1		P21W / P21W	W5W	W5W	W5W	P21/5W	P21/5W	P21W	P21W	C5W
3 (E36) Compact 03/94 → 08/00 II	HB4	HB3	H1		PY21W / PY21W	WY5W	W5W	W5W	P21W	R10W	P21W	P21W	C5W
3 (E36) Convertible, Coupe 03/92 → 04/99 I	H1	H1	H1		P21W / P21W	W5W	W5W	P21W	P21W	P21/4W		P21W	C5W
3 (E36) Convertible, Coupe 03/92 → 04/99 II	H7	H7	H1		PY21W / PY21W	WY5W	W5W	P21W	P21W	R5W	P21W	P21W	C5W
3 (E36) Touring 01/95 → 10/99 I	H7	H7	H1		P21W / P21W	W5W	W5W	P21W	P21/5W	P21/5W	P21W	P21W	C5W
3 (E36) Touring 01/95 → 10/99 II	H7	H7	H1		PY21W / PY21W	WY5W	W5W	P21W	P21W	R5W	P21W	P21W	C5W
3 (E46) 02/98 → 08/01	H7	H7	HB4		PY21W / P21W		W5W		P21/4W	P21/4W	P21W	P21W	C5W
3 (E46) 02/98 → 08/01 XENON	D2S	H7	HB4		PY21W / P21W		W5W		P21/4W	P21/4W	P21W	P21W	C5W
3 (E46) 09/01 → 04/05	H7	H7	H11		P21W / P21W		W5W		P21/4W	P21/4W	P21W	P21W	C5W
3 (E46) 09/01 → 04/05 XENON	D2S	H7	H11		P21W / PY21W		W5W		P21/4W	P21/4W	P21W	P21W	C5W
3 (E46) Convertible, Coupe 04/99 → I	H7	H7	HB4		P21W / P21W	W5W	W5W		P21W	K10W	P21W	P21W	C5W
3 (E46) Convertible, Coupe 04/99 → II	H7	H7	H11		PY21W / PY21W	WY5W	W5W		P21W	K10W	P21W	P21W	C5W
3 (E46) Convertible 04/00 → XENON	D2S	H7	H11		PY21W / PY21W	WY5W	W5W		P21W	K10W	P21W	P21W	C5W
3 (E46) Touring 10/99 → 02/05	H7	H7	HB4 / H11		P21W / P21W	W5W	W5W		P21W	P21W	P21W	P21W	C5W
3 (E46) Touring 10/99 → 02/05 XENON	D2S	H7	H11		PY21W / PY21W	WY5W	W5W		P21W	P21W	P21W	P21W	C5W
3 (E90) 01/05 → 12/11 I	H7	H7	HB4		P21W / P21W	WY5W	W5W		P21W	P21W	H21W	P21W	C5W
3 (E90) 01/05 → 12/11 II	H7	H7	H8		PY21W / PY21W	WY5W	H8		P21W	P21W	H21W	P21W	C5W
3 (E90) 01/05 → 12/11 BI- XENON	D1S	D1S	H8	H8	PY21W / PY21W	WY5W	H8		P21W	P21W	H21W	P21W	C5W
3 (E91) Touring 09/05 → I	H7	H7	HB4		P21W / P21W	W5W	W5W		P21W	P21W	H21W	P21W	C5W
3 (E91) Touring 09/05 → II	H7	H7	H8		PY21W / PY21W	WY5W	H8		P21W	P21W	H21W	W16W	C5W
3 (E91) Touring 09/05 → BI- XENON	D1S	D1S	H8	H8	PY21W / PY21W	WY5W	H8		P21W	P21W	H21W	W16W	C5W
3 (E92) Coupe 06/06 → BI- XENON	D1S	D1S	H11 / H8	H8	LED	WY5W	H8		LED	LED	H21W	H21W	LED
3 (E93) Convertible 08/06 → BI-XENON	D1S	D1S	H11 / H8	H8	LED	WY5W	H8		LED	LED	H21W	H21W	LED
3 (F30/F35) 10/11 →	H7	H7	H8		P21W / PY21W		H6W		P21W	LED	H21W	P21W	LED
3 (F30/F35) 10/11 → BI-XENON	D1S	D1S	H8	LED	P21W / PY21W		LED		P21W	LED	H21W	P21W	LED
3 (F31) Touring 06/12 →	H7	H7	H8		P21W / PY21W		H6W		P21W	LED	H21W	P21W	LED
3 (F31) Touring 06/12 → BI-XENON	D1S	D1S	H8	LED	P21W / PY21W		LED		P21W	LED	H21W	P21W	LED
3 (F34) Gran Tourismo 03/13 →	H7	H7	H8		P21W / PY21W		H6W		H21W	LED	H21W	P21W	LED
3 (F34) Gran Tourismo 03/13 → BI-XENON	D1S	D1S	H8	LED	P21W / PY21W		LED		H21W	LED	H21W	P21W	LED
4 (F32) Coupé 07/13 → BI-XENON	D1S	D1S	H8	LED	LED / P21W		LED		H21W	LED	H21W	LED	LED
4 (F33) Convertible 10/13 → BI-XENON	D1S	D1S	H8	LED	LED / P21W		LED		H21W	LED	H21W	LED	LED
4 (F36) Gran Coupé 03/14 → BI-XENON	D1S	D1S	H8		LED / P21W		LED		H21W	LED	H21W	LED	LED
5 (E39) 11/95 → 08/00	H7	HB3	H7		P21W / PY21W		W5W	P21W	P21W	R10W	P21W	P21W	C5W
5 (E39) 11/95 → 08/00 XENON I	D2S	HB3	H7		P21W / P21W		W5W	P21W	P21W	R10W	P21W	P21W	C5W
5 (E39) 11/95 → 08/00 XENON II	D2S	HB3	H7		PY21W / PY21W		W5W	P21W	P21W	R10W	P21W	P21W	C5W
5 (E39) 09/00 → 05/04 I	H7	H7	H8		P21W / P21W		W5W	P21W	P21W	LED	P21W	P21W	C5W
5 (E39) 09/00 → 05/04 II	H7	H7	H8		PY21W / PY21W		W5W	P21W	P21W	LED	P21W	P21W	C5W
5 (E39) 09/00 → 05/04 XENON I	D2S	H7	H8		P21W / P21W		W5W	P21W	P21W	LED	P21W	P21W	C5W
5 (E39) 09/00 → 05/04 XENON II	D2S	H7	H8		PY21W / PY21W		W5W	P21W	P21W	LED	P21W	P21W	C5W
5 (E39) 09/00 → 05/04	D2S	H7	HB4		PY21W / PY21W		W5W	P21W	P21W	LED	P21W	P21W	C5W
5 (E60) 07/03 → 03/10 I	H7	H7	HB4		PY21W / PY21W		W5W		P21W	P21W	P21W	W16W	C5W
5 (E60) 07/03 → 03/10 II	H7	H7	H8		PY21W / PY21W		H8		P21W	P21W	P21W	W16W	C5W

5 (E60) 07/03 → 12/04 XENON	D2S	D2S	HB4		PY21W / PY21W		W5W		P21W	P21W	P21W	W16W	C5W
5 (E60) 01/05 → 03/10 BI-XENON	D1S	D1S	H8	H8	PY21W / PY21W		H8		P21W	P21W	P21W	W16W	C5W
5 (E61) Touring 06/04 → I	H7	H7	HB4		PY21W / PY21W		W5W		P21W	P21W	P21W	W16W	C5W
5 (E61) Touring 06/04 → II	H7	H7	H8		PY21W / PY21W		H8		P21W	P21W	P21W	W16W	C5W
5 (E61) Touring 06/04 → 12/04 XENON	D2S	D2S	HB4		PY21W / PY21W		W5W		P21W	P21W	P21W	W16W	C5W
5 (E61) Touring 01/05 → 03/10 BI-XENON	D1S	D1S	H8	H8	PY21W / PY21W		H8		P21W	P21W	P21W	W16W	C5W
5 (F10) 03/10 →	H7	H7	H8		LED	LED			LED	LED	H21W	W16W	LED
5 (F10) 03/10 → BI-XENON	D1S	D1S	H8	LED	LED	LED			LED	LED	H21W	W16W	LED
5 (F11) Touring 09/10 →	H7	H7	H8		LED	LED			LED	LED	H21W	W16W	LED
5 (F11) Touring 09/10 → BI-XENON	D1S	D1S	H8	LED	LED	LED			LED	LED	H21W	W16W	LED
5 GRAN TURISMO (F07) 03/10 →	H7	H7	H8	LED	LED	LED			LED	LED	LED	W16W	LED
5 GRAN TURISMO (F07) 03/10 → BI-XENON	D1S	D1S	H8	LED	LED	LED			LED	LED	LED	W16W	LED
6 (E63) 01/04 → XENON	D2S	H7	HB4		PY21W / PY21W	WY5W			LED	LED	P21W	P21W	C5W
6 (E64) Convertible 04/04 → XENON	D2S	H7	HB4		PY21W / PY21W	WY5W			LED	LED	P21W	P21W	C5W
6 (F12) Convertible 03/11 → BI-XENON	D1S	D1S	LED		LED	LED			LED	LED	P21W	W16W	LED
6 (F13, F06) Coupe / Gran Coupe 11/10 → BI-XENON	D1S	D1S	LED		LED	LED			LED	LED	P21W	W16W	LED
7 (E38) 10/94 → 08/98	H1	H1	H3		P21W / P21W	W5W	W5W	P21W	P21W	R5W	P21W	P21W	C5W
7 (E38) 10/94 → 08/98 XENON	D2S	H1	H3		P21W / P21W	W5W	W5W	P21W	P21W	R5W	P21W	P21W	C5W
7 (E38) 09/98 → 11/01	H7	HB3	H3		PY21W / PY21W	WY5W	W5W	P21W	P21/5W	P21/5W	P21W	P21W	C5W
7 (E38) 09/98 → 11/01 XENON	D2S	HB3	H3		PY21W / PY21W	WY5W	W5W	P21W	P21/5W	P21/5W	P21W	P21W	C5W
7 (E65/E66) 11/01 → 04/05	H7	H7	H3		P21W / P21W	W5W	W5W		LED	LED	P21W	W16W	W5W
7 (E65/E66) 11/01 → 04/05 XENON	D2S	H7	H3		PY21W / PY21W	WY5W	W5W		LED	LED	P21W	W16W	W5W
7 (F01, F02, F03, F04) 06/08 → BI-XENON	D1S	D1S	H8		LED		H8		LED	LED	P21W	W16W	LED
8 (E31) 04/90 → 12/99	H1	H1	H1		P21W/ P21W	W5W	W5W	P21W	P21W	R5W	P21W	P21W	C5W
i3 08/13 →	H7	H11		LED	LED		LED	LED	LED	LED	LED	LED	LED
i3 08/13 → LED	LED	H11		LED	LED		LED	LED	LED	LED	LED	LED	LED
X1 (E84) 03/09 →	H7	H7	H11 / H8	LED	PY21W / PY21W	WY5W	W5W/ H8		P21W	P21W	P21W	P21W	LED
X1 (E84) 03/09 → XENON	D1S	H8	H11 / H8	LED	PY21W / PY21W	WY5W	W5W/ H8		P21W	P21W	P21W	P21W	LED
X3 (E83) 01/04 →	H7	H7	H11		P21W / PY21W	WY5W	W5W		W16W	P21W	P21W	P21W	LED
X3 (E83) 01/04 → XENON	D1S/ D2S	H7	H11		P21W / PY21W	WY5W	W5W		W16W	P21W	P21W	P21W	LED
X3 (F25) 09/10 →	H7	H7	H11 / H8		P21W / PY21W				P21W	P21W	H21W	W16W	LED
X3 (F25) 09/10 → BI-XENON	D1S	D1S	H11 / H8		P21W / PY21W				P21W	P21W	H21W	W16W	LED
X4 (F26) 04/14 →	H7	H7	H8	W21W	P21W / P21W		W5W	LED	LED	LED	H21W	P21W	LED
X4 (F26) 04/14 → BI-XENON	D1S	D1S	H8		P21W / P21W		LED	LED	LED	LED	H21W	P21W	LED
X5 (E53) 05/00 → 09/03	H7	H1	H3		P21W / PY21W	W5W	H6W		P21/5W	P21/5W	P21W	P21W	C5W
X5 (E53) 10/03 →	H7	HB3	H11		P21W / PY21W	WY5W	H6W		P21W	P21W	P21W	P21W	C5W
X5 (E53) 05/00 → 09/02 XENON	D2S	HB3	H3		P21W / PY21W	WY5W	H6W		P21/5W	P21/5W	P21W	P21W	C5W
X5 (E53) 10/02 → 09/03 XENON	D2S	HB3	H11		P21W / PY21W	WY5W	H6W		P21/5W	P21/5W	P21W	P21W	C5W
X5 (E53) 10/03 → XENON	D2S	HB3	H11		P21W / PY21W	WY5W	H6W		P21W	P21W	P21W	P21W	C5W
X5 (E70) 02/07 →	H7	H1	H11		P21W / P21W		W5W/ H8		P21W	W16W	P21W	W16W	C5W
X5 (E70) 02/07 → BI-XENON	D1S	D1S	H11	H8	P21W / P21W		W5W/ H8		P21W	W16W	P21W	W16W	C5W
X5 (F15) 11/12 →	H7	H7	H8		LED		LED	LED	LED	LED	LED	LED	LED
X5 (F15) 11/12 → BI-XENON	D1S	D1S	H8	LED	LED		LED	LED	LED	LED	LED	LED	LED
X6 (E71) 05/08 → BI-XENON	D1S	D1S	H11		H21W		H8		P21W	P21W	H21W	H21W	C5W
X6 (F16) 05/14 →	H7	H7	H8	LED	LED		LED		LED	LED	LED	LED	LED
X6 (F16) 05/14 → BI-XENON	D1S	D1S	H8	LED	LED		LED		LED	LED	LED	LED	LED

Z3 (E36) 10/95 → 01/03 I	H7	HB3	H7		P21W / P21W	W5W	W5W	W5W	P21W	R5W	P21W	W5W	C5W
Z3 (E36) 10/95 → 01/03 II	HB4	HB3	H7		PY21W / PY21W	WY5W	W5W	W5W	P21W	R5W	P21W	W5W	C5W
Z3 (E36) Coupe 04/97 - 06/03 I	H7	HB3	H7		P21W / P21W	W5W	W5W	W5W	P21W	R5W	P21W	P21W	R10W
Z3 (E36) Coupe 04/97 - 06/03 II	HB4	HB3	H7		PY21W / PY21W	WY5W	W5W	W5W	P21W	R5W	P21W	P21W	R10W
Z4 (E85) 02/03 →	H7	H7	H11		P21W / PY21W	W5W / WY5W	W5W		P21W	P21W	P21W	P21W	W5W
Z4 (E85) 02/03 → XENON	D2S	H7	H11		PY21W / PY21W	W5W / WY5W	W5W		P21W	P21W	P21W	P21W	W5W
Z4 (E86) Coupe 03/06 →	H7	H7	H11		P21W / PY21W	W5W / WY5W	W5W		P21W	P21W	P21W	P21W	W5W
Z4 (E86) Coupe 03/06 → XENON	D2S	H7	H11		P21W / PY21W	W5W / WY5W	W5W		P21W	P21W	P21W	P21W	W5W
Z4 (E89) 05/09 →	D1S	D1S	H8		LED				W16W	W16W	H21W	H21W	LED
Z8 (E52) 06/00 → 06/03	D2S	HB3					H6W				P21W	P21W	C5W
CHEVROLET													
ALERO 03/99 → 09/04	H7	HB3			P27/7W	WY5W	P27/7W	W16W	P27/7W	P27/7W		W16W	W5W
AVEO Hatchback (T250, T255) 01/08 →	H4	H4	H3		P21W / P21W	WY5W	W5W	W5W	P21/5W	P21/5W	P21W	P21W	W5W
AVEO Notchback (T250, T255) 05/05 →	H4	H4	H3		PY21W / PY21W	WY5W	W5W	W5W	P21W	R5W	P21W	P21W	C5W
AVEO Hatchback (T300) 03/11 →	H7	H1	H27W/2		PY21W / PY21W	WY5W	W5W	W5W	P21/5W	P21/5W	P21W	P21W	W5W
AVEO Notchback (T300) 03/11 →	H7	H1	H27W/2		PY21W / PY21W	WY5W	W5W	W5W	P21/5W	P21/5W	P21W	P21W	W5W
CAMARO '98 07/98 → 12/02	HB4	HB3			W5W			W16W					W3W
CAPTIVA (C100, C140) 06/06 →	H7	H1	H8		PY21W / PY21W	WY5W	W5W	W5W	P21/5W	P21/5W	P21W	W16W	
CORVETTE (C6) 09/04 →	D1S	H9	H10		P27W				P27/7W	P27/7W	P27W	P27/7W	W3W
CORVETTE '97 01/97 → 09/04	HB4	HB3	H3		P21W / PY21W	W5W	W5W		P21/5W	P21/5W	P21W	P21W	W3W
CRUZE (J300) 05/09 →	H4	H4	H8		P21W / PY21W	WY5W	W5W		P21/5W	P21/5W	P21W	W16W	W5W
CRUZE Hatchback (J305) 06/11 →	H4	H4	H8		P21W / PY21W		W5W		P21/5W	P21/5W	W21W	W16W	W5W
CRUZE Station Wagon (J308) 08/12 →	H4	H4	H8		P21W / PY21W		W5W	LED	P21/5W	W5W	W21W	W16W	W5W
EPICA (KL1_) 01/05 →	H1	H1	H3		PY21W / PY21W		W5W		P21/5W	P21/5W	P21W	W16W	W5W
EVANDA 03/05 →	H1	H1	H3		P21W / P21W	W5W	W5W	W5W	P21/5W	P21/5W	P21W	P21W	W5W
IMPALA 01/99 → 12/05	HB4	HB3			P27W / P27W					W5W		W16W	W5W
KALOS 03/05 →	H4	H4	H3		P21W / PY21W	W5W	W5W	W5W	P21/5W	P21/5W	P21W	P21W	W5W
KALOS Hatchback 03/05 →	H4	H4	H3		P21W / PY21W	W5W	W5W	W5W	P21/5W	P21/5W	P21W	P21W	W5W
LACETTI (J200) 03/05 →	H7	H1	H27W/1		PY21W / PY21W		W5W	W5W	P21/5W	P21/5W	P21W	P21W	W5W
MATIZ (M200, M250) 03/05 → up to ident. no. 577030	H4	H4	H3		P21W / PY21W		W5W	P21W	P21/5W	P21/5W	P21W	P21W	W5W
MATIZ (M200, M250) 03/05 → from ident. no. 577031	H4	H4	H3		P21W / PY21W		W5W	P21W	P21W	W5W	P21W	P21W	W5W
NUBIRA Estate, Hatchback 01/05 →	H1	H1	H3		PY21W / PY21W	W5W / WY5W	W5W	P21W	P21/5W	P21/5W	P21W	P21W	W5W
ORLANDO (J309) 12/10 →	H4	H4	H8		P21W / PY21W	W5W	W5W		P21/5W	P21/5W	P21W	P21W	W5W
REZZO 03/05 →	H4	H4	H3		P21W/ PY21W	W5W	W5W	P21W	P21/5W	P21/5W	P21W	P21W	W5W
SPARK (M300) 03/10 →	H4	H4			PY21W / PY21W	WY5W	W5W		P21/5W	P21/5W	P21W	P21W	W5W
TRAILBLAZER (KC_) 09/01 → 09/08	HB4	HB3	H27W/1		P27/7W / P27/7W		W5W		P27/7W	P27/7W	P27/7W	P21W	W5W
TRANS SPORT 08/96 → 09/05	H4	H4	H27W/1		PY21W / P27		W5W		P27/7W	P27/7W	P27/7W	P27W	W5W
TRAX 12/12 →	H7	H1	H8	W21/5W	WY21W /WY21W	WY5W	W21/5W	LED	W21/5W	W21/5W	W21W	W16W	W5W
VIVANT 01/00→	H4	H4	H3		PY21W / P21W	W5W	W5W	W5W	P21/5W	P21/5W	P21W	P21W	W5W
VIVANT 01/05 →	H4	H4	H3		PY21W / P21W	W5W	W5W	W5W	P21/5W	P21/5W	P21W	P21W	W5W
CHRYSLER													
300 C 09/04 → 12/10	HB4	HB3	H10		PY27/7W / PY27/7W		P27/7W	W16W	P21/5W	P21/5W	W21W	W21W	W3W
300 C 09/04 → 12/10 XENON	D1S	HB3	H10		PY27/7W / PY27/7W		P27/7W	W16W	P21/5W	P21/5W	W21W	W21W	W3W
300 M (LR) 07/98 → 09/04	HB4	HB3	H3		P27/7W / P27/7W	T4W	W5W	W16W	P27/7W	W5W	P27/7W		W5W
CROSSFIRE / Roadster 07/03 → 12/07	H7	H7	HB4		PY21W / PY21W	W5W	W5W		P21/5W	P21/5W	P21W	P21W	
GRAND VOYAGER V (RT) 10/07 → XENON	D1S	H11					W5W		P27/7W	P27/7W	P27W	P27W	

NEON (PL) 05/94 → 02/00	H4	H4	H3		P21W / P21W	T4W	T4W		P21/5W	P21/5W	P21W	P21W	W5W
NEON II 08/99 → 12/06	H4	H4	H3		P21W / P21W	W5W	W5W		P21/5W	P21/5W	P21W	P21W	W5W
NEW YORKER 04/93 → 09/98 I	H4	H4	H3		P21W / PY21W		W5W		P21/5W	P21/5W	P21W	P21W	W5W
NEW YORKER 04/93 → 09/98 II	H4	H4	H3		P21W / PY21W		W5W		P21W	W5W	P21W	P21W	W5W
PT CRUISER (PT_) 06/00 → 12/10	HB4	HB3	HB4		P21W / PY21W	W5W	W5W	W16W	P27/7W	P27/7W	P27/7W	P27/7W	W3W
PT CRUISER Convertible 03/04 → 03/08	HB4	HB3	HB3		P21W / PY21W	W5W	W5W	W16W	P27/7W	P27/7W			W3W
SEBRING (JR) 04/01 → 06/07	H4	H4	HB4		P27/7W / P27/7W	W5W	W5W	W16W	P27/7W	P27/7W	P27/7W	W16W	W5W
SEBRING (JS) 07/07 → 12/10	HB4	HB3	H10		P27/7W / P27/7W			W16W	P27/7W		P27W	P27W	W5W
SEBRING Convertible (JR) 04/01 →06/06	H4	H4	HB4		P27/7W / P27/7W	W5W	W5W	W16W	P21W	W3W		W16W	W5W
SEBRING Convertible (JS) 07/07 → 12/10	HB4	HB3	H10		P27/7W / P27/7W		P27/7W	W16W	P27/7W		P27/7W	P27W	W5W
STRATUS (JA) 12/05 → 04/01	H4	H4	HB4		P21W / PY21W		W5W	W16W	P21/5W	P21/5W	P21W	P21W	W5W
STRATUS (JX) Convertible 04/96 → 04/01	H4	H4	HB4		P21W / PY21W	T4W	W5W	W16W	P21/5W	P21/5W	P21W	P21W	W5W
VISION 09/93 → 12/97	HB3	HB4	H3		P21W / PY21W	T4W	W5W		P21/5W	P21/5W	P21W	P21W	W5W
VOYAGER III (GS) 01/95 → 03/01	H4	H4	H3		P21W / PY21W	T4W	W5W		P21/5W	P21/5W	P21W	P21W	C5W
VOYAGER IV (RG) 02/00 → 12/08	H7	H7			PY21W / PY21W	T4W	W5W		P21/5W	P21/5W	P21W	P21W	W5W
VOYAGER V (RT) 10/07 →	D1S	H11			LED				P27/7W	P27/7W	P27W	P27W	
CITROËN													
AX (ZA-_) 07/86 → 12/98 I	R2	R2	H3		P21W / PY21W	W5W	W5W		P21W	R5W	P21W	P21W	T4W
AX (ZA-_) 07/86 → 12/98 II	H4	H4	H3		P21W / PY21W	W5W	W5W		P21W	R5W	P21W	P21W	T4W
AX (Phase 2) 07/91 →	H4	H4	H3		P21W / PY21W		T4W		P21W	T4W	P21W	P21W	T4W
BERLINGO (MF) 07/96 →	H4	H4			PY21W / PY21W	W5W/WY5W	W5W	W5W	P21/5W	P21/5W	P21W	P21W	W5W
BERLINGO Box (M_) 07/96 →	H4	H4			PY21W / PY21W	W5W	W5W	W5W	P21/5W	P21/5W	P21W	P21W	W5W
BERLINGO 04/08 →	H4	H4	H1		PY21W / PY21W	WY5W	W5W	W16W	P21/5W	P21/5W	P21W	P21W	W5W
BERLINGO Box 04/08 →	H4	H4	H1		PY21W / PY21W	WY5W	W5W	W16W	P21/5W	P21/5W	P21W	P21W	W5W
C1 (PM_, PN_) 06/05 →	H4	H4			P21W / PY21W	WY5W	W5W	W5W	P21/5W	P21/5W	P21W	P21W	W5W
C1 II 04/14 →	H7	H7	LED	LED	PY21W / PY21W		W5W		P21/5W	P21/5W	P21W	P21W	W5W
C2 (JM_) 09/03 →	H4	H4	H1		PY21W / PY21W	WY5W	W5W	W5W	P21/5W	P21/5W	P21W	P21W	W5W
C2 ENTERPRISE 04/09 →	H4	H4	H1		PY21W / PY21W	WY5W	W5W	W5W	P21/5W	P21/5W	P21W	P21W	W5W
C3 (FC_) 02/02 →	H7	H1	H1		PY21W / PY21W	WY5W	W5W	W16W	P21/5W	P21/5W	P21W	P21W	W5W
C3 II 11/09 →	H7	H1			PY21W / PY21W	WY5W	W5W	W5W	P21/5W	P21/5W	P21W	P21W	W5W
C3 PICASSO 02/09 →	H7	H1	H3		H21W / PY21W	WY5W	W5W	W5W	P21/5W	P21/5W	P21W	P21W	W5W
C3 PLURIEL (HB_) 05/03 →	H7	H1	H1		PY21W / PY21W	WY5W	W5W	W5W	P21/5W	P21/5W	P21W	P21W	W5W
C4 I (LC_) 11/04 →	H7	H1	H11		PY21W / PY21W	WY5W	W5W	W5W	P21W	W5W	P21W	P21W	W5W
C4 I (LC_) 11/04 → XENON	D1S	H1	H11		PY21W / PY21W	WY5W	W5W	W5W	P21W	W5W	P21W	P21W	W5W
C4 II (B7) 11/09 →	H7	H1	H11	P21/5W	H21W / PY21W	WY5W	P21/5W	W5W	P21/5W	P21/5W	P21W	P21W	W5W
C4 II (B7) 11/09 → XENON	D1S	D1S	H11	P21/5W	H21W / PY21W	H21W	P21/5W	W5W	P21/5W	P21/5W	P21W	P21W	W5W
C4 Aircross 08/10 →	H7	H11	H11		WY21W / WY21W		W5W	LED	W21W	LED	W21W	W16W	W5W
C4 Aircross 08/10 → Xenon	D2S	H11	H11		WY21W / WY21W		W5W	LED	W21W	LED	W21W	W16W	W5W
C4 Cactus 09/14 →	H7	H7		LED	PY21W / PY21W		LED	LED	P21W	W5W	P21W	P21W	W5W
C4 Coupe (LA_) 11/04 →	H7	H1	H11		PY21W / PY21W	WY5W	W5W	W5W	P21/5W	P21/5W	P21W	P21W	W5W
C4 Coupe (LA_) 11/04 → XENON	D1S	H1	H11		PY21W / PY21W	WY5W	W5W	W5W	P21/5W	P21/5W	P21W	P21W	W5W
C4 Grand Picasso I (UA_) 10/06 →	H7	H1	H11		H21W / PY21W	WY5W	H6W	W5W	P21W	W5W	P21W	P21W	W5W
C4 Grand Picasso I (UA_) 10/06 → BI-XENON	D1S	D1S	H11		H21W / PY21W	WY5W	H6W	W5W	P21W	W5W	P21W	P21W	W5W
C4 Grand Picasso II 09/13 →	H7	H7	H11	LED	/ PY21W		LED	LED	W21/5W	W21/5W	W21/5W	W16W	W5W
C4 Grand Picasso II 09/13 → BI-XENON			H11	LED	LED / PY21W		LED	LED	W21/5W	W21/5W	W21/5W	W16W	W5W
C4 Picasso I (UD_) 02/07 →	H7	H1	H11		H21W / PY21W	WY5W	H6W	W5W	P21/5W	P21/5W	P21W	P21W	W5W

C4 Picasso I (UD_) 02/07 → BI-XENON	D1S	D1S	H11		H21W / PY21W	WY5W	H6W	W5W	P21/5W	P21/5W	P21W	P21W	W5W
C4 Picasso II 02/13 →	H7	H7	H11	LED	/ PY21W		LED	LED	P21/5W	P21/5W	P21/5W	W16W	W5W
C4 Picasso II 02/13 → BI-XENON			H11	LED	LED / PY21W		LED	LED	P21/5W	P21/5W	P21/5W	W16W	W5W
C5 I (DC_) 03/01 → 08/04	H7	H1	H1		PY21W / PY21W	WY5W	W5W	W5W	P21/4W	P21/4W	P21/4W	P21W	W5W
C5 I (DC_) 03/01 → 08/04 XENON	D2R	H1	H1		PY21W / PY21W	WY5W	W5W	W5W	P21/4W	P21/4W	P21/4W	P21W	W5W
C5 II (RC_) 08/04 →	H7	H1	H11		PY21W / PY21W	WY5W	H6W	R5W	P21/5W	P21/5W	P21W	P21W	W5W
C5 II (RC_) 08/04 → XENON	D1S	H1	H11		PY21W / PY21W	WY5W	H6W	R5W	P21/5W	P21/5W	P21W	P21W	W5W
C5 III (RD_) 02/08 →	H7	H1	H8	LED	- / P21W	WY5W	W5W	R5W	P21/5W	P21/5W	H21W	H21W	W5W
C5 III (RD_) 02/08 → BI-XENON	D1S	D1S	H8	LED	- / P21W	WY5W	W5W		P21/5W	P21/5W	H21W	H21W	W5W
C5 III Break (TD_) 02/08 →	H7	H1	H8	LED	- / P21W	WY5W	W5W	R5W	P21/5W	P21/5W	H21W	H21W	W5W
C5 III Break (TD_) 02/08 → BI-XENON	D1S	D1S	H8	LED	- / P21W	WY5W	W5W	R5W	P21/5W	P21/5W	H21W	H21W	W5W
C6 (TD_) 09/05 → BI-XENON	D2S	D2S	H11		PY21W	WY5W	W5W		P21/5W	P21/5W	P21W	P21W	W5W
C8 (EA_, EB_) 07/02 →	H7	H1	H1		H21W / PY21W	WY5W	W5W	R5W	P21/5W	P21/5W	P21W	P21W	W5W
C8 (EA_, EB_) 07/02 → XENON	D1S	H1	H1		H21W / PY21W	WY5W	W5W	R5W	P21/5W	P21/5W	P21W	P21W	W5W
C15 (VD_) 10/84 → 12/05 I	R2	R2	H1		P21W / P21W	W5W	T4W		P21W	R5W	P21W	P21W	R5W
C15 (VD_) 10/84 → 12/05 II	H4	H4	H1		P21W / P21W	W5W	T4W		P21W	R5W	P21W	P21W	R5W
C-CROSSER (EP_) 02/07 →	H11	H7	H11		WY21W / PY21W		W5W	W21W	W21/5W	W21/5W	W21W	W21W	W5W
C-CROSSER (EP_) 02/07 → XENON	D2S	H7	H11		WY21W / PY21W		W5W	W21W	W21/5W	W21/5W	W21W	W21W	W5W
C-ZERO 10/10 →	H4	H4	H11		W21W / PY21W	WY5W	W5W		P21/5W	P21/5W	W21W	W21W	W5W
D3S 11/09 →	H7	H1		LED	PY21W	WY5W	W5W	W5W	P21/5W	P21/5W		P21W	W5W
DS4 04/11 →	H7	H1	H11	P21/5W	H21W / PY21W				P21/5W	P21/5W	P21W	P21W	W5W
DS4 04/11 → XENON	D1S	H1	H11	P21/5W	H21W / PY21W				P21/5W	P21/5W	P21W	P21W	W5W
DS5 11/11 →	H7	H1	H11		- / PY21W		LED		P21W	LED	P21W	P21W	W5W
DS5 11/11 → BI-XENON	D1S	H1	H11		- / PY21W		LED		P21W	LED	P21W	P21W	W5W
EVASION (22, U6) 06/94 → 07/02	H1	H1	H3		P21W / PY21W	W5W / WY5W	W5W	W5W	P21/5W	P21/5W	P21W	P21W	W5W
JUMPER I (230P) Box 02/94 → 04/02	H4	H4	H3		P21W / PY21W	W5W	T4W	W5W	P21/4W	P21/4W	P21W	P21W	W5W
JUMPER I (230P) Bus 02/94 → 04/02	H4	H4	H3		P21W / PY21W	W5W	T4W	P21W	P21/4W	P21/4W	P21W	P21W	C5W
JUMPER I (230P) Platform 02/94 → 04/02	H4	H4	H3		P21W / PY21W	W5W	T4W		P21W	R5W	P21W	P21W	R5W
JUMPER II (244, Z_) Box 04/02 → 04/06	H7	H1	H1		PY21W / PY21W	W5W / WY5W	W5W	W5W	P21W	P21/4W	P21/4W	P21W	W5W
JUMPER II (244, Z_) Bus 04/02 → 04/06	H7	H1	H1		PY21W / PY21W	W5W / WY5W	W5W	P21W	P21W	P21/4W	P21/4W	P21W	W5W
JUMPER II (244, Z_) Platform 04/02 → 04/06	H7	H1	H1		PY21W / PY21W	W5W / WY5W	W5W		P21W	P21/4W	P21/4W	P21W	W5W
JUMPER III Bus 04/06 →	H7	H1	H1		PY21W / PY21W	W5W / WY5W	W5W		P21W	P21/4W	P21/4W	P21W	W5W
JUMPER III Box 04/06 →	H7	H1	H1		W16W / PY21W	WY5W	W5W		P21W	P21/5W	P21/5W	P21W	C5W
JUMPER III Platform 04/06 →	H7	H1	H1		P21W / PY21W		W5W		P21W	R5W	P21W	P21W	R5W
JUMPY (U6U) 06/94 →	H4	H4	H1 / H3		P21W / PY21W	W5W / WY5W	W5W	P21W	P21/5W	P21/5W	P21W	P21W	R5W
JUMPY Box (BS_, BT_, BY_, BZ_) 06/94 →	H4	H4	H1 / H3		P21W / PY21W	W5W / WY5W	W5W	P21W	P21/5W	P21/5W	P21W	P21W	R5W
JUMPY 01/07 →	H4	H4	H1		PY21W / PY21W	WY5W	W5W	P21W	P21/5W	P21/5W	P21W	P21W	W5W
JUMPY Box 01/07 →	H4	H4	H1		PY21W / PY21W	W5W / WY5W	W5W	P21W	P21/5W	P21/5W	P21W	P21W	R5W
RELAY 01/94 →	H4	H4	H3		P21W / P21W		W5W		P21/5W	P21/5W	P21W	P21W	W5W
NEMO Box (AA_) 02/08 →	H4	H4	H1		PY21W / PY21W	WY5W	W5W	W5W	P21W	P21/4W	P21/4W	P21W	C5W
NEMO Estate 04/09 →	H4	H4	H1		PY21W / PY21W		W5W	W5W	P21W	P21/4W	P21/4W	P21W	C5W
SAXO (S0, S1) 05/96 →	H4	H4	H1		PY21W / PY21W		W5W		P21/5W	P21/5W	P21W	P21W	W5W
XANTIA (X1 / X2) 03/93 → 04/03	H1	H1	H3		P21W / PY21W	W5W	W5W		P21/5W	P21/5W	P21W	P21W	W5W
XANTIA Break (X1) 06/95 → 01/98	H1	H1	H3		P21W / PY21W	W5W	W5W	W5W	P21/5W	P21/5W	P21W	P21W	W5W
XANTIA Break (X2) 01/98 → 04/03	H1	H1	H1		PY21W / PY21W	WY5W	W5W	W5W	P21/5W	P21/5W	P21W	P21W	W5W
XM (Y4) 05/94 → 10/00	H1	H1	H1		PY21W / PY21W	W5W / WY5W	W5W	W5W	P21/5W	P21/5W	P21W	P21W	W5W

XM Break (Y4) 05/94 → 10/00	H1	H1	H1		PY21W / PY21W	W5W/ WY5W	W5W	W5W	P21/5W	P21/5W	P21W	P21W	W5W
XSARA (N1) 04/97 → 04/05 SINGLE REFLECTOR	H4	H4	H1		PY21W / PY21W	W5W/ WY5W	W5W	W5W	P21/5W	P21/5W	P21W	P21W	W5W
XSARA (N1) 04/97 → 04/05 DUAL REFLECTOR EARLY MODELS	H1	H1	H3		PY21W / PY21W	W5W/ WY5W	W5W	W5W	P21/5W	P21/5W	P21W	P21W	W5W
XSARA (N1) 04/97 → 04/05 DUAL REFLECTOR LATE MODELS	H7	H7	H3		PY21W / PY21W	W5W/ WY5W	W5W	W5W	P21/5W	P21/5W	P21W	P21W	W5W
XSARA Break (N2) 10/97 → 08/05 SINGLE REFLECTOR	H4	H4	H1		P21W / PY21W	W5W/ WY5W	W5W	P21W	P21/4W	P21/4W	P21W	P21W	W5W
XSARA Break (N2) 10/97 → 08/05 DUAL REFLECTOR EARLY MODELS	H1	H1	H1		P21W / P21W	W5W/ WY5W	W5W	P21W	P21/4W	P21/4W	P21W	P21W	W5W
XSARA Break (N2) 10/97 → 08/05 DUAL REFLECTOR LATE MODELS	H7	H7	H1		P21W / P21W	W5W/ WY5W	W5W	P21W	P21/4W	P21/4W	P21W	P21W	W5W
XSARA Coupe (N0) 02/98 → 04/05 SINGLE REFLECTOR	H4	H4	H1		PY21W / PY21W	W5W/ WY5W	W5W	W5W	P21/5W	P21/5W	P21W	P21W	W5W
XSARA Coupe (N0) 02/98 → 04/05 DUAL REFLECTOR EARLY MODELS	H1	H1	H1		PY21W / PY21W	W5W/ WY5W	W5W	W5W	P21/5W	P21/5W	P21W	P21W	W5W
XSARA Coupe (N0) 02/98 → 04/05 DUAL REFLECTOR LATE MODELS	H7	H7	H1		PY21W / PY21W	W5W/ WY5W	W5W	W5W	P21/5W	P21/5W	P21W	P21W	W5W
XSARA PICASSO (N68) 12/99 → UP TO ID 09869FV	H4	H4	H1		PY21W / PY21W	WY5W	W5W	W5W	P21/5W	P21/5W	P21W	P21W	W5W
XSARA PICASSO (N68) 12/99 → FROM ID 09870FV	H4	H4	H11		PY21W / PY21W	WY5W	W5W	W5W	P21/5W	P21/5W	P21W	P21W	W5W
ZX (N2) 03/91 → 10/97 SINGLE REFLECTOR	H4	H4	H3		P21W / P21W		W5W	W5W	P21W	R5W	P21W	P21W	W5W
ZX (N2) 03/91 → 10/97 DUAL REFLECTOR	H1	H1	H3		P21W / P21W		W5W	W5W	P21W	R5W	P21W	P21W	W5W
ZX Break (N2) 10/93 → 02/98	H1	H1	H3		P21W / P21W	W5W	W5W	W5W	P21W	R5W	P21W	P21W	W5W
DACIA													
DOKKER 11/12 →	H4	H4		P21W	P21W / PY21W	WY5W	W5W	P21W	P21/5W	P21/5W	P21W	P21W	W5W
DOKKER Express 12/12 →	H4	H4		P21W	P21W / PY21W	WY5W	W5W	P21W	P21/5W	P21/5W	P21W	P21W	W5W
DUSTER 04/10 →	H7	H1		W21/5W	PY21W / PY21W	WY5W	W5W	LED	P21/5W	P21/5W	P21W	P21W	W5W
LODGY 03/12 →	H4	H4	H16	P21W	PY21W / PY21W	WY5W	W5W	W16W	P21/5W	P21/5W	P21W	P21W	W5W
LOGAN (LS_) 09/04 →	H4	H4	H11		PY21W / PY21W	W5W	W5W	P21W	P21/5W	P21/5W	P21W	P21W	W5W
LOGAN EXPRESS (FS_) 03/09 →	H4	H4	H11		P21W / PY21W	WY5W	W5W	P21W	P21W	P21/5W	P21W	P21W	W5W
LOGAN MCV (KS_) 02/07 →	H4	H4	H11		P21W / PY21W	WY5W	W5W	P21W	P21/5W	P21/5W	P21W	P21W	W5W
LOGAN Pick-up (US_) 03/08 →	H4	H4	H11		PY21W / PY21W	WY5W	W5W	P21W	P21/5W	P21/5W	P21W	P21W	W5W
LOGAN II 10/12 →	H7	H1	H16	W21/5W	PY21W / PY21W	WY5W	W5W	W16W	P21/5W	P21/5W	P21W	P21W	W5W
LOGAN II MCV 02/13 →	H7	H1	H16		PY21W / PY21W	WY5W	W5W	W16W	P21/5W	P21/5W	P21W	P21W	W5W
SANDERO 06/08 →	H4	H4	H11		PY21W / PY21W	W5W	W5W	W16W	W16W	P21/5W	P21W	P21W	W5W
SANDERO II 10/12 →	H7	H1			PY21W / PY21W	WY5W	W5W	W16W	P21/5W	P21/5W	P21W	P21W	W5W
SOLENZA 02/03 →	H4	H4	H11		PY21W / PY21W	WY5W	W5W	W5W	P21/5W	P21/5W	P21W	P21W	W5W
DAEWOO-CHEVROLET													
AVEO 11/02 → 04/05	H4	H4			PY21W / PY21W	WY5W	W5W		P21W	R5W	P21W	P21W	W5W
ESPERO (KLEJ) 10/91 → 09/99	H1	H1	H3		P21W / P21W	W5W	W5W		P21/5W	P21/5W	P21W	P21W	W5W
EVANDA (KLAL) 08/02 →	H1	H1	H3		P21W / P21W	W5W	W5W		P21/5W	P21/5W	P21W	P21W	R5W
KALOS (KLAS) 09/02 →	H4	H4	H3		P21W / P21W	W5W	W5W	R5W	P21/5W	P21/5W	P21W	P21W	W5W
KALOS (KLAS) Notchback 09/02 →	H4	H4	H3		P21W / P21W	W5W	W5W	W5W	P21/5W	P21/5W	P21W	P21W	W5W
KORANDO (KJ) 01/99 →	H4	H4	H3		P21W / P21W	W5W	W5W		P21/5W	P21/5W	P21W	P21W	W5W
KORANDO Convertible (KJ) 02/99 →	H4	H4	H3		P21W / P21W	W5W	W5W		P21/5W	P21/5W	P21W	P21W	W5W
LACETTI Estate 04/97 → 05/99	H4	H4	H7		PY21W / PY21W	WY5W	W5W	W5W	P21/5W	P21/5W	P21W	P21W	W5W
LACETTI Hatchback (KLAN) 02/04 →	H7	H1			PY21W / PY21W	WY5W	W5W		P21/5W	P21/5W	P21W	P21W	W5W
LACETTI Notchback 04/97 → 05/99	H4	H4	H7		PY21W / PY21W	WY5W	W5W	W5W	P21/5W	P21/5W	P21W	P21W	W5W
LACETTI (J200) Notchback 06/02 → 12/04	H7	H1	H7		PY21W / PY21W	WY5W	W5W	W5W	P21/5W	P21/5W	P21W	P21W	W5W
LANOS (KLAT) 05/97 → UP TO ID 595898	H4	H4	H3		PY21W / PY21W	W5W	W5W	P21W	P21/5W	P21/5W	P21W	P21W	W5W
LANOS (KLAT) 05/97 → FROM ID 595899	H4	H4	H3		P21W / PY21W	W5W	W5W	P21W	P21/5W	P21/5W	P21W	P21W	W5W
LANOS (KLAT) Notchback 05/97 →	H4	H4	H3		P21W / PY21W	W5W	W5W	P21W	P21/5W	P21/5W	P21W	P21W	W5W

LEGANZA (KLAV) 06/97 → 04/04	H1	H3	H3		P21W / PY21W	W5W	W5W	P21W	P21/5W	P21/5W	P21W	P21W	W5W
MATIZ (KLYA) 09/98 → UP TO ID 577030	H4	H4	H3		P21W / P21W	W5W	W5W		P21/5W	P21/5W	P21W	P21W	W5W
MATIZ (KLYA) 09/98 → FROM ID 577031	H4	H4	H3		P21W / P21W	W5W	W5W	W5W	P21/5W	P21/5W	P21W	P21W	W5W
MUSSO (FJ) 01/99 →	H4	H4	H3		PY21W / PY21W	W5W	W5W		P21W	R5W	P21W	P21W	W5W
NEXIA (KLETN) 02/95 → 08/97	H4	H4	H3		PY21W / PY21W	W5W	W5W		P21/5W	P21/5W	P21W	P21W	W5W
NEXIA (KLETN) Notchback 02/95 → 08/97	H4	H4	H3		PY21W / PY21W	W5W	W5W	P21W	P21/5W	P21/5W	P21W	P21W	W5W
NUBIRA (KLAJ) 05/97 → SINGLE REFLECTOR	H4	H4	H3		PY21W / PY21W	W5W / WY5W	W5W		P21/5W	P21/5W	P21W	P21W	W5W
NUBIRA (KLAJ) 05/97 → DUAL REFLECTOR	H1	H1	H3		PY21W / PY21W	W5W / WY5W	W5W		P21/5W	P21/5W	P21W	P21W	W5W
REXTON (GAB_) 04/02 →	H7	H7			P27/7W / P21W	W5W	W5W	W5W	P27/7W	P27/7W	P21W	P21W	C5W
REZZO (KLAU) 09/00 →	H4	H4	H3		P21W / PY21W	W5W	W5W	W5W	P21/5W	P21/5W	P21W	P21W	W5W
TACUMA	H4	H4	H3		P21W / PY21W	W5W	W5W	W5W	P21/5W	P21/5W	P21W	P21W	W5W
DAIHATSU													
ALTIS 08/01 → 12/05	HB4	HB3	HB4		W16W / W21W	W5W	W5W	W5W	W21/5W	W21/5W	W21W	W16W	W5W
ALTIS 10/96 → 07/01 SINGLE REFLECTOR	H4	H4	H3		W21W / PY21W	W5W	W5W	W21W	W21/5W	W21/5W	W21W	W21W	W5W
ALTIS 10/96 → 07/01 DUAL REFLECTOR	HB4	HB3	H3		W21W / PY21W	W5W	W5W	W21W	W21/5W	W21/5W	W21W	W21W	W5W
APPLAUSE I (A101, A111) 06/89 → 07/97	H4	H4			P21W / P21W	W5W	W5W	P21W	P21/5W	P21/5W	P21W	P21W	W5W
APPLAUSE II (A101) 07/97 →05/00	H4	H4			P21W / P21W	W5W	W5W	P27W	P21/5W	P21/5W	P21W	P21W	W5W
BEGO 11/05 → SINGLE REFLECTOR	H4	H4	H8		P21W / PY21W	W5W	W5W	P21W	P21/5W	P21/5W	P21W	P21W	W5W
BEGO 11/05 → DUAL REFLECTOR	H1	HB3	H8		P21W / PY21W	W5W	W5W	P21W	P21/5W	P21/5W	P21W	P21W	W5W
CHARADE (L2_) 03/03 →	H4	H4			WY21W / WY21W	WY5W	W5W	W5W	W21/5W	W21/5W	W21W	W21W	W5W
CHARADE IV (G200, G202) 01/93 → 06/00	H4	H4			P21W / P21W	W5W	W5W	P21W	P21W	R5W	P21W	P21W	W5W
COPEN 09/03 →	H1	HB3	HB4		PY21W / WY21W	W5W	W5W		P21/5W	P21/5W	P21W	P21W	W5W
CUORE IV (L501) 12/94 → 10/98	H4	H4			P21W / P21W	W5W	W5W		P21/5W	P21/5W	P21W	P21W	W5W
CUORE V (L5) 11/96 → 10/98	H4	H4			P21W / P21W	W5W	W5W		P21/5W	P21/5W	P21W	P21W	W5W
CUORE VI (L7_) 10/98 → 05/03	H4	H4	H3		W21W / PY21W	W5W	W5W		P21/5W	P21/5W	P21W	P21W	W5W
CUORE VII (L251) 03/03 →	H4	H4			WY5W	WY5W	W5W		P21/5W	P21/5W	W21W	W21W	W5W
CUORE VIII 04/07 →	H4	H4			W21W / WY21W		W5W	W5W	P21/5W	P21/5W	W21W	W21W	W5W
FEROZA (F300) 10/88 → 12/99	H4	H4					W5W		P21/5W	P21/5W	P21W	P21W	W5W
GRAN MOVE (G3) 10/96 →	H4	H4			P21W / P21W	W5W	W5W	W21W	P21/5W	P21/5W	P21W	P21W	W5W
HIJET I Box/Bus (S85) 12/92 →	H4	H4	H1		P21W / P21W	W5W	W5W		P21/5W	P21/5W	P21W	P21W	W5W
HIJET II 01/93 →	H4	H4	H1		P21W / P21W	W5W	W5W		P21/5W	P21/5W	P21W	P21W	W5W
MATERIA (M4_) 10/06 →	H4	H4	HB4		WY21W / WY21W	W5W	W5W	W16W	W21/5W	W21/5W	W21W		W5W
MIRA GINO 08/98 →	H4	H4			W21W / W21W	W5W	W5W		W21/5W	W21/5W			W5W
MOVE (L6, L9) 06/94 →	H4	H4	H1		P21W / P21W	W5W	W5W	W16W	P21/5W	P21/5W	P21W	P21W/ W21W	W5W
MOVE 01/96 → 09/98	H4	H4	H1		P21W / P21W	W5W	W5W	P21W	P21/5W	P21/5W	P21W	P21W	W5W
MOVE 10/98 →	H4	H4	H1		P21W / P21W	W5W	W5W		P21/5W	P21/5W	P21W	W21W	W5W
ROCKY (F7, F8) 06/84 → 12/98	H4	H4			P21W / P21W	W5W	W5W		P21/5W	P21/5W	P21W	P21W	W5W
SIRION (M1) 04/98 → 04/05	H4	H4	H3		PY21W / PY21W	W5W	W5W	P21W	P21/5W	P21/5W	P21W	P21W	W5W
SIRION (M3_) 01/05 →	H4	H4	HB4			W5W	W5W	W16W	P21/5W	P21/5W	P21W	P21W	W5W
TERIOS (J1) 05/97 → 10/05	H4	H4			P21W / PY21W	W5W	W5W	W21W	P21/5W	P21/5W	P21W	P21W	W5W
TERIOS (J2_) 11/05 → SINGLE REFLECTOR	H4	H4			P21W / PY21W	W5W	W5W	P21W	P21/5W	P21/5W	P21W	P21W	W5W
TERIOS (J2_) 11/05 → DUAL REFLECTOR	H1	HB3			P21W / PY21W	W5W	W5W	P21W	P21/5W	P21/5W	P21W	P21W	W5W
TREVIS 06/06 →	H4	H4			W21W / P21W	W5W	W5W		W21/5W	W21/5W			W5W
YRV (M2) 02/01→	H4	H4	H3		WY21W / WY21W	W5W	W5W	W16W	W21/5W	W21/5W	W21W	W16W	W5W

DODGE													
AVENGER 06/07 →	HB4	HB3	H10		P27/7W		P27/7W	W16W	W16W	P27/7W	P27W	P27W	W5W
CALIBER 06/06 →	H4	H4	H10			W5W	W5W		P27/7W	P27/7W	P27/7W	W16W	W5W
CARAVAN III (RG_) 02/00 →	H7	H7	H3		PY21W / PY21W	T4W	W5W	W16W	W16W	P21/5W	P21W	P21W	W5W
JOURNEY 06/08 →	H1	HB3	H10			WY5W	W5W		P27/7W	P27/7W		P27/7W	W5W
NEON 05/94 - 08/99 →	H4	H4	H3		P21W / P21W	T4W	W5W		P21/5W	P21/5W	P21W	P21W	W5W
NEON II 08/99 → 12/06	H4	H4	H3		P21W / P21W	T4W	T4W	W16W	W16W	P21/5W	P21W	P21W	W5W
NITRO 06/07 →	H4	H4	H10			WY5W	W5W		P27/7W	P27/7W	P27/7W	W16W	W5W
FIAT													
126 09/72 → 09/00	R2	R2			P21W / P21W		T4W		P21/5W	P21/5W	P21W	P21W	W5W
500 (312) 10/07 →	H7	H1	H3	W21/5W	WY21W / PY21W	WY5W	W21/5W	W5W	P21W	R10W	P21W	P21W	C5W
500 (312) 10/07 → BI-Xenon	D1S	D1S	H3	W21/5W	WY21W / PY21W	WY5W	W21/5W	W5W	P21W	R10W	P21W	P21W	C5W
500C (312) 09/09 →	H7	H1	H1	W21/5W	WY21W / PY21W	WY5W	W21/5W	W5W	P21W	R10W	P21W	P21W	C5W
500C (312) 09/09 → BI-XENON	D1S	D1S	H1	W21/5W	WY21W / PY21W	WY5W	W21/5W	W5W	P21W	R10W	P21W	P21W	C5W
500 L 09/12 →	H7	H7	H11	W21/5W	WY21W / P21W	WY5W	W21/5W	LED	P21/5W	P21/5W	W16W	W16W	C5W
500X (334) 09/14 →	H4	H4	H8		PY21W / P21W	WY5W			P21W	P21W	P21W	P21W	W5W
ALBEA 01/03 →	H1	H7	H3		PY21W / PY21W		W5W		P21/4W	P21/4W	P21W	P21W	W5W
BARCHETTA (183) 03/95 → 05/05	H1	H1	H1		P21W / P21W		W5W		P21/5W	P21/5W	P21W	P21W	W5W
BRAVO I / BRAVA (182) 10/95 → 12/02	H1	H1	H1		P21W / PY21W	W5W	W5W		P21W	R5W	P21W	P21W	W5W
BRAVO II (198) 11/06 →	H1	H1	H11		WY5W / WY5W	R10W	W5W	W2,3W	P21/5W	P21/5W	P21W	P21W	W5W
BRAVO II (198) 11/06 → BI-XENON	D1S	D1S	H11		WY5W / WY5W	R10W	W5W	W2,3W	P21/5W	P21/5W	P21W	P21W	W5W
CINQUECENTO (170) 07/91 → 07/99	H4	H4			P21W / PY21W	W5W	W5W		P21/5W	P21/5W	P21W	P21W	C5W
COUPE (FA/175) 11/93 → 08/00	H1	H1	H1		P21W / PY21W	W5W	W5W		P21/5W	P21/5W	P21W	P21W	W5W
CROMA 194 06/05 →	H7	H1	H1		PY21W / PY21W	W5W	W5W	W5W	P21/5W	P21/5W	P21W	P21W	W5W
DOBLO (119) 03/01 →	H7	H1	H1		PY21W / PY21W	W5W	W5W	W5W	P21/5W	P21/5W	P21W	P21W	W5W
DOBLO (263) 11/09 →	H7	H1	H1		PY21W / PY21W	WY5W	W5W	W5W	P21W	P21/4W	P21/4W	W16W	
DOBLO Cargo (223) 03/01 →	H7	H1	H1		PY21W / PY21W	W5W	W5W	W5W	P21/5W	P21/5W	P21W	P21W	W5W
DUCATO 05/99 → 04/02	H4	H4	H3		PY21W / PY21W	W5W/ WY5W	W5W		P21W	P21/4W	P21/4W	P21W	W5W
DUCATO Box (230L) 03/94 → 04/02	H4	H4	H3		PY21W / PY21W	W5W	W5W		P21W	P21/4W	P21/4W	P21W	C5W
DUCATO Bus (244, Z_) 04/02 →	H7	H1	H1		PY21W / PY21W	W5W/ WY5W	W5W	P21W	P21W	P21/4W	P21/4W	P21W	W5W
DUCATO Bus (250) 07/06 →	H7	H1	H1		PY21W / PY21W	WY5W	W5W	W5W	W5W	P21/5W	P21W	P21W	C5W
DUCATO Platform/Carrier (230) 03/94 → 04/02	H4	H4	H3		PY21W / PY21W	W5W	W5W		P21W	P21/4W	P21/4W	P21W	C5W
FIORINO Kasten 02/08 →	H4	H4	H1		P21W / PY21W		W5W		P21W	P21W	P21/4W	P21W	W5W
FREEMONT (JC) 08/11 →	H11	HB3			WY21W / WY21W	WY5W	W5W			LED		W21W	W5W
IDEA 12/03 →	H1	H7	H1		PY21W / PY21W		W5W	W5W	P21/5W	P21/5W	P21W	P21W	C5W
LINEA (323) 06/07 →	H7	H1	H1		PY21W / PY21W	WY5W	W5W		P21W	R5W	P21W	P21W	W5W
MAREA (185) 09/96 → 12/07	H1	H1	H1		P21W / PY21W	W5W	W5W		P21/5W	P21/5W	P21W	P21W	W5W
MAREA Weekend (185) 09/96 → 12/07	H1	H1	H1		P21W / PY21W	W5W	W5W		P21/5W	P21/5W	P21W	P21W	W5W
MULTIPLA (186) 04/99 → 12/10	H7	H1	H1		P21W / PY21W	W5W	W5W		P21/4W	P21/4W	P21W	P21W	C5W
PALIO (178BX) 04/96 → I	H7	H1	H3		PY21W / PY21W		W5W		P21/4W	P21/4W	P21W	P21W	W5W
PALIO (178BX) 04/96 → II	H4	H4	H1		P21W / PY21W	W5W	W5W		P21/4W	P21/4W	P21W	P21W	C5W
PALIO Weekend (178DX) 04/96 →	H4	H4	H1		P21W / PY21W	W5W	W5W		P21W	P21/4W	P21/4W	P21W	C5W
PANDA (141_) Van 01/86 → 02/04	R2	R2			P21W / P21W		R5W		P21/5W	P21/5W	P21W	P21W	C5W
PANDA (141A_) 03/80 → 07/04	R2	R2	H3		P21W / P21W		R5W		P21/5W	P21/5W	P21W	P21W	C5W
PANDA (169) 09/03 →	H4	H4	H1		PY21W / PY21W	WY5W	W5W	W5W	P21/5W	P21/5W	P21W	P21W	C5W
PANDA (169) Van 03/04 →	H4	H4	H1		PY21W / PY21W	WY5W	W5W	W5W	P21/5W	P21/5W	P21W	P21W	C5W

PANDA (312) 02/12 →	H4	H4	H11	P21/5W	PY21W / PY21W		P21/5W		P21/5W	P21/5W	W16W	W16W	C5W
PUNTO (176) 09/93 → 09/99 SINGLE REFLECTOR	H4	H4	H3		P21W / P21W	W5W / WY5W	W5W		P21W	R10W	P21W	P21W	W5W
PUNTO (176) 09/93 → 09/99 DUAL REFLECTOR	H1	H1	H3		PY21W / PY21W	W5W / WY5W	W5W		P21W	R10W	P21W	P21W	W5W
PUNTO (176C) Convertible 04/94 → 06/00 DUAL REFLECTOR EARLY MODELS	H1	H1	H3		PY21W / PY21W	W5W	W5W		P21W	R10W	P21W	P21W	W5W
PUNTO (176C) Convertible 04/94 → 06/00 SINGLE REFLECTOR	H4	H4	H3		P21W / PY21W	W5W	W5W		P21W	R10W	P21W	P21W	W5W
PUNTO (188) 09/99 → 12/02 II	H7	H7	H3		PY21W / PY21W	WY5W	W5W		P21W	R10W	P21W	P21W	W5W
PUNTO (188) 09/99 → 12/02 II	H1	H1	H3		PY21W / PY21W	WY5W	W5W		P21W	R10W	P21W	P21W	W5W
PUNTO (199) 03/12 →	H4	H4	H11	W21W	PY21W / PY21W	WY5W	W5W	W2,3W	P21W	LED	W16W	W16W	W5W
PUNTO / GRANDE PUNTO (199) 10/05 →	H4	H4	H1		P21W / PY21W	WY5W	P21/5W	W2,3W	P21/5W	R5W	P21W	P21W	W5W
PUNTO / GRANDE PUNTO Van (199) 04/08 →	H7	H7	H3		PY21W / PY21W	WY5W	W5W	W2,3W	P21W	R5W	P21W	P21W	W5W
PUNTO EVO 07/08 → 02/12	H4	H4	H11		PY21W / PY21W	WY5W	W5W	W2,3W	P21W	LED	W16W	W16W	W5W
PUNTO Van (176L) 04/96 → 02/00 DUAL REFLECTOR	H1	H1	H3		P21W / PY21W	W5W / WY5W	W5W		P21W	R5W	P21W	P21W	C5W
PUNTO Van (176L) 04/96 → 02/00 SINGLE REFLECTOR	H4	H4	H3		P21W / PY21W	W5W / WY5W	W5W		P21W	R5W	P21W	P21W	C5W
PUNTO Van (188AX) 02/00 - 10/09	H7	H7	H3		PY21W / PY21W	WY5W	W5W		P21W	R10W	P21W	P21W	W5W
PUNTO Van (199) 03/09 →	H4	H4	H11		P21W / PY21W	W5W	W5W	W2,3W	P21W	LED	W16W	W16W	W5W
QUBO (225) 09/08 →	H4	H4	H1		P21W / PY21W	W5W	W5W		P21W	P21/4W	P21/4W	P21W	W5W
SCUDO (220L) Box 02/96 → 12/06 DUAL REFLECTOR	H1	H1	H1 / H3		P21W / PY21W	W5W	W5W	P21W	P21W	R5W	P21W	P21W	W5W
SCUDO (220L) Box 02/96 → 12/06 SINGLE REFLECTOR	H4	H4	H1 / H3		P21W / PY21W	W5W	W5W	P21W	P21W	R5W	P21W	P21W	W5W
SCUDO (220P) Estatenato 02/96 → 12/06 DUAL REFLECTOR	H1	H1	H1 / H3		P21W / PY21W	W5W	W5W	P21W	P21W	R5W	P21W	P21W	W5W
SCUDO (220P) Estatenato 02/96 → 12/06 SINGLE REFLECTOR	H4	H4	H1 / H3		P21W / PY21W	W5W	W5W	P21W	P21W	R5W	P21W	P21W	W5W
SCUDO (270_) 01/07 →	H4	H4	H1		PY21W / PY21W	WY5W	W5W	P21W	P21W	P21/5W	P21W	P21W	W5W
SCUDO 01/04 → DUAL REFLECTOR	H1	H1	H1		P21W / PY21W		W5W		P21W	R5W	P21W	P21W	W5W
SCUDO 01/04 → SINGLE REFLECTOR	H4	H4	H1		P21W / PY21W		W5W		P21W	R5W	P21W	P21W	W5W
SCUDO 02/96 → 12/03 DUAL REFLECTOR	H1	H1	H3		P21W / PY21W		W5W		P21W	R5W	P21W	P21W	W5W
SCUDO 02/96 → 12/03 SINGLE REFLECTOR	H4		H3		P21W / PY21W		W5W		P21W	R5W	P21W	P21W	W5W
SEDICI 06/06 →	H4	H4	H11		P21W / PY21W	WY5W	W5W		P21/5W	P21/5W	P21W	P21W	W5W
SEICENTO (187) 01/98 → 01/10	H4	H4	H3		P21W / P21W	WY5W	W5W	W2,3W	P21/5W	P21/5W	P21W	P21W	W5W
SIENA (178_) 04/96 → DUAL REFLECTOR EARLY MODELS	H1	H1	H1		PY21W / PY21W	W5W	W5W		P21W	P21/4W	P21/4W	P21W	C5W
SIENA (178_) 04/96 → DUAL REFLECTOR LATE MODELS	H7	H7	H1		PY21W / PY21W	W5W	W5W		P21W	P21/4W	P21/4W	P21W	C5W
SIENA (178_) 04/96 → SINGLE REFLECTOR	H4	H4	H1		PY21W / PY21W	W5W	W5W		P21W	P21/4W	P21/4W	P21W	C5W
STILO (192) 10/01 → 11/06	H7	H1	H1		PY21W / PY21W	WY5W	W5W	W2,3W	P21/5W	P21/5W	P21W	P21W	W5W
STILO (192) 10/01 → 11/06 XENON	D2R	H1	H1		PY21W / PY21W	WY5W	W5W	W2,3W	R5W	P21/5W	P21W	P21W	W5W
STILO (192) Multi Wagon 01/03 → 08/08	H7	H1	H1		PY21W / PY21W	WY5W	W5W	W2,3W	R5W	P21/5W	P21W	P21W	W5W
STILO (192) Multi Wagon 01/03 → 08/08 XENON	D2R	H1	H1		PY21W / PY21W	WY5W	W5W	W2,3W	R5W	P21/5W	P21W	P21W	W5W
STRADA (178E) 09/98 → DUAL REFLECTOR	H7	H7	H1		P21W / PY21W	W5W	W5W		P21W	P21/4W	P21/4W	P21W	C5W
STRADA (178E) 09/98 → SINGLE REFLECTOR	H4	H4	H1		P21W / PY21W	W5W	W5W		P21W	P21/4W	P21/4W	P21W	C5W
TEMPRA (159) 03/90 → 12/98	H4	H4	H3		P21W / PY21W	W5W	W5W		P21W	R5W	P21W	P21W	C5W
TEMPRA (159) S.W. 03/90 → 12/98	H4	H4	H3		P21W / PY21W	W5W	W5W		P21/5W	P21/5W	P21W	P21W	C5W
ULYSSE (179AX) 08/02 → 06/11	H7	H7	H1		PY21W / PY21W	WY5W	W5W		P21/5W	P21/5W	P21W	P21W	W5W
ULYSSE (179AX) 08/02 → 06/11 XENON	D1S	H7	H1		PY21W / PY21W	WY5W	W5W		R5W	P21/5W	P21W	P21W	W5W
ULYSSE (220) 06/94 → 08/02	H1	H1	H3		P21W / PY21W	W5W	W5W		P21/5W	R5W	P21W	P21W	W5W
UNO (146A/E) 01/83 → 06/06	H4	H4	H3		P21W / P21W	W5W	W5W		P21W	R5W	P21W	P21W	W5W

FORD													
B-MAX 10/12 →	H7	H1 / H15	H11	H15	PY21W / PY21W		W5W	LED	W21/5W	W21/5W	H21W	P21W	W5W
C-MAX (DM2) 02/07 →	H7	H1	H8		PY21W / PY21W	WY5W	W5W		P21/4W	P21/4W	P21W	P21W	
C-MAX (DM2) 02/07 → XENON	D1S	H1	H8		PY21W / PY21W	WY5W	W5W		P21/4W	P21/4W	P21W	P21W	
C-MAX II 12/10 →	H11	H1	H11		PY21W / PY21W	WY5W	W5W		W21/5W	W21/5W	W21W	W21W	W5W
C-MAX II 12/10 → BI-XENON	D3S	H1	H11		PY21W / PY21W	WY5W	W5W		W21/5W	W21/5W	W21W	W21W	W5W
COUGAR (EC_) 08/98 → 12/01	H7	HB3	H3		P21W / P21W	W5W	H6W		P21/5W	P21/5W	P21W	P21W	C5W
ECOSPORT 09/11 →	H4	H4	H11		PY21W / PY21W	WY5W	W5W		P21/5W	P21/5W			W5W
ESCORT VII (GAL, AAL, ABL) 01/95 → 08/02	H4	H4	H3		P21W / PY21W	W5W	W5W	W5W	P21W	R5W	P21W	P21W	R10W
ESCORT VII (ALL) Convertible 02/95 → 08/00	H4	H4	H3		P21W / PY21W	W5W	W5W	W5W	P21W	R5W	P21W	P21W	R10W
ESCORT VII (GAL, ANL) Saloon) 01/95 → 02/99 TAIL/STOPLIGHT	H4	H4	H3		P21W / PY21W	W5W	W5W	W5W	P21W	R5W	P21W	P21W	W5W
ESCORT VII (GAL, ANL) Saloon) 01/95 → 02/99 TAILLIGHT	H4	H4	H3		P21W / PY21W	W5W	W5W	W5W	P21/5W	P21/5W	P21W	P21W	W5W
ESCORT VII RS Cosworth 01/95 → 10/98	H4	H4	H3		P21W / P21W	W5W	W5W		P21/5W	P21/5W	P21W	P21W	R10W
ESCORT '95 EXPRESS (AVL) 01/95 →	H4	H4	H3		P21W / PY21W	W5W	W5W		P21/5W	P21/5W	P21W	P21W	R10W
ESCORT CLASSIC (AAL, ABL) 10/98 → 07/00	H4	H4	H3		P21W / PY21W	W5W	W5W		P21W	R5W	P21W	P21W	R10W
ESCORT CLASSIC Turnier (ANL) 02/99 → 07/00	H4	H4	H3		P21W / PY21W	W5W	W5W		P21W	R5W	P21W	P21W	R10W
FIESTA IV (JA_, JB_) 08/95 → 09/02 SINGLE REFLECTOR	H4	H4	H1		P21W / PY21W	W5W	W5W		P21/5W	P21/5W	P21W	P21W	W5W
FIESTA IV (JA_, JB_) 08/95 → 09/02 DUAL REFLECTOR	H7	H1	H1		P21W / PY21W	W5W	W5W		P21W	R5W	P21W	P21W	W5W
FIESTA V (JH_, JD_) 11/01 → 03/10	H4	H4	H11		PY21W / PY21W	W5W/ WY5W	W5W	W16W	P21/5W	P21/5W	P21W	P21W	C5W
FIESTA VI 06/08 → 12/12	H7	H1	H11		PY21W / PY21W	WY5W	W5W	W16W	P21/5W	P21/5W	P21W	W16W	W5W
FIESTA VI 01/13 →	H7	H15	H11	H15	PY21W / PY21W	WY5W	W5W	LED	P21/5W	P21/5W	P21W	W16W	
FOCUS C-MAX 10/03 → 03/07	H7	H1	H3		PY21W / PY21W	W5W	W5W		P21W	P21/4W	P21/4W	P21W	C5W
FOCUS C-MAX 10/03 → 03/07 XENON	D2S	H1	H3		PY21W / PY21W	W5W	W5W		P21W	P21/4W	P21/4W	P21W	C5W
FOCUS I (DAW, DBW) 10/98 → 11/04 SINGLE REFLECTOR	H4	H4	H3		P21W / P21W	W5W/ WY5W	W5W		P21/5W	P21/5W	P21W	P21W	C5W
FOCUS I (DAW, DBW) 10/98 → 11/04 DUAL REFLECTOR	H7	H1	H3		P21W / P21W	W5W/ WY5W	W5W		P21/5W	P21/5W	P21W	P21W	C5W
FOCUS I (DNW) Estate 02/99 → 11/04 SINGLE REFLECTOR	H4	H4	H3		P21W / P21W	W5W/ WY5W	W5W		P21/5W	P21/5W	P21W	P21W	C5W
FOCUS I (DNW) Estate 02/99 → 11/04 DUAL REFLECTOR	H7	H1	H3		P21W / P21W	W5W/ WY5W	W5W		P21/5W	P21/5W	P21W	P21W	C5W
FOCUS I (DNW) Estate 02/99 → 11/04 XENON	D2S	H1	H3		P21W / P21W	W5W/ WY5W	W5W		P21/5W	P21/5W	P21W	P21W	C5W
FOCUS I (DFW) Notchback 02/99 → 03/05 SINGLE REFLECTOR	H4	H4	H3		P21W / P21W	W5W/ WY5W	W5W		P21/5W	P21/5W	P21W	P21W	C5W
FOCUS I (DFW) Notchback 02/99 → 03/05 DUAL REFLECTOR	H7	H1	H3		P21W / P21W	W5W/ WY5W	W5W		P21/5W	P21/5W	P21W	P21W	C5W
FOCUS I (DFW) Notchback 02/99 → 03/05 XENON	D2S	H1	H3		P21W / P21W	W5W/ WY5W	W5W		P21/5W	P21/5W	P21W	P21W	C5W
FOCUS II (DA_) 11/04 →	H7	H1	H11 / H8		PY21W / PY21W	WY5W	W5W	W5W	W5W	P21/5W	P21W	P21W	C5W
FOCUS II (DA_) 11/04 → XENON	D1S	H1	H11 / H8		PY21W / PY21W	WY5W	W5W	W5W	W5W	P21/5W	P21W	P21W	C5W
FOCUS II Cabriolet 10/06 →	H7	H1	H8		PY21W / PY21W	WY5W	W5W	W5W	W5W	P21/5W	P21W	P21W	C5W
FOCUS II (DA_, DAW_) Estate 11/04 →	H7	H1	H11 / H8		PY21W / PY21W	WY5W	W5W	W5W	W5W	P21/5W	P21W	P21W	C5W
FOCUS II (DA_, DAW_) Estate 11/04 → XENON	D1S	H1	H11 / H8		PY21W / PY21W	WY5W	W5W	W5W	W5W	P21/5W	P21W	P21W	C5W
FOCUS III 04/11 → TAIL/STOPLIGHT	H7	H1	H11		PY21W / PY21W	WY5W	W5W		P21W	W5W	P21W	W16W	
FOCUS III 04/11 → TAILLIGHT	H7	H1	H11		PY21W / PY21W	WY5W	W5W		P21W	P21/5W	P21/5W	W16W	
FOCUS III 04/11 → BI-XENON	D3S	D3S	H11		PY21W / PY21W	WY5W	W5W		P21W	P21/5W	P21/5W	W16W	
FOCUS III Notchback, Turnier 04/11 → TAIL/STOPLIGHT	H7	H1	H11		PY21W / PY21W	WY5W	W5W		P21W	W5W	P21W	W16W	
FOCUS III Notchback, Turnier 04/11 → TAILLIGHT	H7	H1	H11		PY21W / PY21W	WY5W	W5W		P21W	P21/5W	P21/5W	W16W	
FOCUS III Notchback, Turnier 04/11 → BI-XENON	D3S	D3S	H11		PY21W / PY21W	WY5W	W5W		P21W	P21/5W	P21/5W	W16W	
FUSION (JU_) 08/02 → 11/05	H4	H4	H11		P21W / PY21W	WY5W	W5W	W16W	P21/5W	P21/5W	P21W	W16W	W5W
GALAXY 03/95 → 05/06 SINGLE REFLECTOR	H4	H4	H1		P21W / PY21W	W5W/ WY5W	W5W	W5W	P21/5W	R5W	P21W	P21W	W5W
GALAXY 03/95 → 05/06 DUAL REFLECTOR	H7	H1	H1		P21W / PY21W	W5W/ WY5W	W5W	W5W	P21/5W	R5W	P21W	P21W	W5W
GALAXY 03/95 → 05/06 XENON	D2S	H1	H1		P21W / PY21W	W5W/ WY5W	W5W	W5W	P21/5W	R5W	P21W	P21W	W5W

GALAXY 04/00 →	H7	H1	H7		P21W / PY21W	W5W	W5W	W5W	P21/5W	R5W	P21W	P21W	W5W
GALAXY 04/00 → XENON	D2S	H1	H7		P21W / PY21W	W5W	W5W	W5W	P21/5W	R5W	P21W	P21W	W5W
GALAXY (WA6) 05/06 →	H7	H1	HB4	LED	PY21W / PY21W	W5W	W5W		P21W	W5W	P21W	P21W	
GALAXY (WA6) 05/06 → XENON	D1S	H1	HB4	LED	PY21W / PY21W	W5W	W5W		P21W	W5W	P21W	P21W	
GRAND C-MAX 12/10 →	H7	H1	H11		PY21W / PY21W	WY5W	W5W				P21W	W16W	W5W
GRAND C-MAX 12/10 → BI-XENON	D3S	H1	H11		PY21W / PY21W	WY5W	W5W				P21W	W16W	W5W
KA (RB_) 09/96 → 11/08	H7	H1	H1		P21W / P21W	W5W	W5W	W5W	P21W	R5W	P21W	P21W	W5W
KA (RU8) 10/08 →	H4	H4	H1		PY21W / PY21W	W5W	W5W	W5W	P21/5W	P21/5W	P21W	P21W	C5W
KUGA I 03/08 →	H7	H7			H21W /		W5W		W21/5W	W21/5W	P21W	P21W	
KUGA I 03/08 → XENON	D1S	H1			H21W /		W5W		W21/5W	W21/5W	P21W	P21W	
KUGA II 05/12 →	H7	H15		H15	/ PY21W		W5W		P21/5W	P21/5W	P21W	W16W	W5W
KUGA II 05/12 → BI-XENON	D3S	H1			/ PY21W		W5W		LED	LED	P21W	W16W	W5W
MAVERICK (UDS, UNS) 01/96 → 04/98	H4	H4	HB4		P21W / P21W	W5W	W5W		P21W	R10W	P21W	P21W	C5W
MAVERICK 02/01 → SINGLE REFLECTOR	H4	H4	H1		P21W / PY21W	W5W	W5W	W5W	P21/5W	P21/5W	P21W	P21W	W5W
MAVERICK 02/01 → DUAL REFLECTOR	H11	H1	H1		P21W / PY21W	W5W	W5W	W5W	P21/5W	P21/5W	P21W	P21W	W5W
MONDEO II (BAP) 09/96 → 11/00	H7	H7	H3		P21W / PY21W	W5W	W5W	W5W	P21W	R5W	P21W	P21W	W5W
MONDEO II (BNP) Estate 09/96 → 11/00	H7	H7	H3		P21W / PY21W	W5W	W5W	W5W	P21W	P21/4W	P21/4W	P21W	C5W
MONDEO III (B5Y) 11/00 → 08/07	H7	H1	H11		P21W / PY21W	W5W / WY5W	W5W		P21W	P21/4W	P21/4W	H21W	C5W
MONDEO III (B5Y) 11/00 → 08/07 XENON	D2S	H1	H11		P21W / PY21W	W5W / WY5W	W5W		P21W	P21/4W	P21/4W	H21W	C5W
MONDEO III (BWY) 11/00 → 08/07	H7	H1	H11		PY21W / PY21W	W5W / WY5W	W5W		P21W	P21/4W	P21/4W	H21W	C5W
MONDEO III (BWY) 11/00 → 08/07 XENON	D2S	H1	H11		PY21W / PY21W	W5W / WY5W	W5W		P21W	P21/4W	P21/4W	H21W	C5W
MONDEO IV 03/07 →	H7	H1	H11	LED	PY21W / PY21W	W5W	W5W		P21/5W	P21/5W	P21W	P21W	W5W
MONDEO IV 03/07 → XENON	D1S	H1	H11	LED	PY21W / PY21W	W5W	W5W		P21/5W	P21/5W	P21W	P21W	W5W
MONDEO V 09/14 → HALOGEN	H7	H15	H8	H15	/ LED		W5W		LED	LED	W16W	W16W	W5W
MONDEO V 09/14 → LED	LED	LED	H8	LED	LED		LED		LED	LED	W16W	W16W	W5W
PROBE II (ECP) 07/93 → 03/98	H4	H4	H3		P21W / PY21W	W5W	W5W		P21/5W	P21/5W	P21W	P21W	W5W
PUMA (EC_) 03/97 → 06/02	HB3	HB3			P21W / P21W	W5W	W5W		P21/5W	P21/5W	P21W	P21W	W5W
RANGER (ER, EQ) 03/98 → 06/06	H4	H4			P21W / P21W	W5W	W5W		P21/5W	P21/5W	P21W	P21W	W5W
RANGER (ES, ET) 05/06 →	H4	H4	H11		P21W / P21W	W5W	W5W		P21/5W	P21/5W	P21W	P21W	W5W
RANGER (TKE) 04/11 →	H4	H4	H11	W21/5W	P21W / WY21W		W5W/ W21/5W		W21/5W	W21/5W	W21W	W21W	W5W
SCORPIO II (GFR, GGR) 10/94 → 08/98	H1	H1	H3		P21W / PY21W	W5W	W5W	W5W	P21W	R5W	P21W	P21W	W5W
S-MAX (WA6) 05/06 →	H7	H1	H8	LED	PY21W	W5W	W5W	W16W	W16W	P21/5W	P21W	P21W	
S-MAX (WA6) 05/06 → XENON	D1S	H1	H8	LED	PY21W	W5W	W5W	W16W	W16W	P21/5W	P21W	P21W	
STREET KA (RL2) 05/03 → 07/05	H7	H1	H1		P21W / P21W	W5W	W5W		P21/5W	P21/5W	P21W	P21W	W5W
TOURNEO CONNECT 06/02 →	H4	H4	H1		PY21W / PY21W	W5W	W5W	W16W	W16W	P21/5W	P21W	P21W	R5W
TOURNEO CUSTOM Bus 12/12 →	H7	H15	H11	H15	PY21W / PY21W		W5W	W16W	P21/5W	P21/5W	P21W	P21W	W5W
TRANSIT CONNECT (P65_, P70_, P80_) 06/02 →	H4	H4	H1		PY21W / PY21W	W5W	W5W	W16W	W16W	P21/5W	P21W	P21W	R5W
TRANSIT Box (E_) 05/91 → 07/00	H4	H4	H3		P21W / P21W	W5W	W5W		P21/5W	P21/5W	P21W	P21W	W5W
TRANSIT Box (FA_) 01/00 → 05/06	H4	H4	H3		P21W / PY21W	W5W	W5W		P21/5W	P21/5W	P21W	P21W	W5W
TRANSIT Box 04/06 →	H4	H4	H11		PY21W / PY21W	W5W	W5W		P21/5W	P21/5W	P21W	P21W	R10W
TRANSIT Box 05/14 →	H7	H15	H11	H15	PY21W / PY21W	WY5W	W5W	W16W	P21/5W	P21/5W	P21W	P21W	W5W
TRANSIT Bus (E_) 06/94 → 07/00	H4	H4	H3		P21W / P21W	W5W	W5W		P21/5W	P21/5W	P21W	P21W	W5W
TRANSIT Bus (FD_, FB_, FS_, FZ_, FC_) 01/00 → 05/06	H4	H4	H3		P21W / PY21W	W5W	W5W	W5W	P21/5W	P21/5W	P21W	P21W	W5W
TRANSIT Bus VII 04/06 →	H4	H4	H11		PY21W / PY21W	WY5W	W5W		P21/5W	P21/5W	P21W	P21W	R10W

TRANSIT Bus 05/14 →	H7	H15	H11	H15	PY21W / PY21W	WY5W	W5W	W16W	P21/5W	P21/5W	P21W	P21W	W5W
TRANSIT CUSTOM Box/Bus 12/12 →	H7	H15	H11	H15	PY21W / PY21W		W5W	W16W	P21/5W	P21/5W	P21W	P21W	W5W
TRANSIT TOURNEO 07/06 →	H4	H4	H11		PY21W / PY21W	WY5W	W5W		P21/5W	P21/5W	P21W	P21W	R10W
HONDA													
ACCORD V (CC7, CD) 03/93 → 12/97	H1	H1			P21W / P21W	W5W	W5W		P21/5W	P21/5W	P21W	P21W	W5W
ACCORD V (CE, CF) 09/95 → 10/98	H1	H1			PY21W / P21W	W5W	W5W		P21/5W	P21/5W	P21W	P21W	W5W
ACCORD V Aerodeck (CE) 09/93 → 02/98	H4	H4			P21W / P21W	W5W	W5W	W5W	W5W	P21/5W	P21W	P21W	W5W
ACCORD V Coupe (CD7, CD9) 09/93 → 02/98	H4	H4			P21W / P21W	W5W	W5W		P21/5W	P21/5W	P21W	P21W	W5W
ACCORD VI (CG, CK) 03/97 → 12/03	HB4	HB3			P21W / PY21W	W5W	W5W	P21W	P21/5W	P21/5W	P21W	P21W	W5W
ACCORD VI Coupe (CG) 12/97 → 06/03	H7	H1	H1		PY21W / PY21W	WY5W	W5W	W5W	P21W	R5W	P21W	P21W	W5W
ACCORD VI Coupe (CG) 12/97 → 06/03 XENON	D2S	H1	H1		PY21W / PY21W	WY5W	W5W	W5W	P21W	R5W	P21W	P21W	W5W
ACCORD VII (CL_, CM_) 02/03 →	HB4	HB3	H11		W21W / W21W		W5W	W21W	W21W	W21/5W	W21W	W21W	W5W
ACCORD VII (CL_, CM_) 02/03 → XENON	D2S	HB3	H11		W21W / W21W		W5W		W21W	W21/5W	W21W	W21W	W5W
ACCORD VIII (CU) 07/09 → 2011	H11	HB3	H11		WY21W / WY21W	WY5W	W5W		W21/5W	W21/5W	W21W	W21W	W5W
ACCORD VIII (CU) 07/09 → 2011 XENON	D2S	HB3	H11		WY21W / WY21W	WY5W	W5W		W21/5W	W21/5W	W21W	W21W	W5W
ACCORD VIII (CU) 2012 →	H11	HB3	H11		PY21W / WY21W		W5W		W21/5W	W21/5W	W21W	W21W	W5W
ACCORD VIII (CU) 2012 → XENON	D2S	HB3	H11		PY21W / WY21W		W5W		W21/5W	W21/5W	W21W	W21W	W5W
ACCORD VIII (CU) Tourer 07/09 → 2011	H11	HB3	H11		WY21W / WY21W	WY5W	W5W		W21/5W	W5W	W21W	W21W	W5W
ACCORD VIII (CU) Tourer 07/09 → 2011 XENON	D2S	HB3	H11		WY21W / WY21W	WY5W	W5W		W21/5W	W5W	W21W	W21W	W5W
ACCORD VIII (CU) Tourer 2012 →	H11	HB3	H11		PY21W / WY21W		W5W		W21/5W	W5W	W21W	W5W	
ACCORD VIII (CU) Tourer 2012 → XENON	D2S	HB3	H11		PY21W / WY21W		W5W		W21/5W	W5W	W21W	W5W	
CIVIC VI Aerodeck (MB, MC) 04/98 → 02/01	H4	H4	H3		PY21W / PY21W	W5W	W5W		P21/5W	P21/5W	P21W	P21W	W5W
CIVIC VI Coupe (EJ, EM1) 03/96 → 12/00	H4	H4	H3		PY21W / PY21W	W5W	W5W	W5W	P21/5W	P21/5W	P21W	P21W	W5W
CIVIC VI Fastback (MA, MB) 09/94 → 02/01	H4	H4			PY21W / WY21W	W5W	W5W	W5W	P21W	P21/5W	P21W	P21W	W5W
CIVIC VI Hatchback, Notchback (EJ, EK) 10/95 → 02/01	H4	H4	H3		PY21W / PY21W	W5W	W5W		W5W	P21/5W	P21W	P21W	W5W
CIVIC VII Coupe (EM2) 02/01 → 12/05 SINGLE REFLECTOR	H4	H4			W21W / W21W	W5W/ WY5W	W5W		W5W	P21/5W	P21W	P21W	W5W
CIVIC VII Coupe (EM2) 02/01 → 12/05 DUAL REFLECTOR	HB4	HB3			W21W / W21W	W5W/ WY5W	W5W		W5W	P21/5W	P21W	P21W	W5W
CIVIC VII Hatchback (EU, EP, EV) 03/99 → 02/06 SINGLE REFLECTOR	H4	H4			PY21W / PY21W	W5W	W5W		W5W	P21/5W	P21W	P21W	W5W
CIVIC VII Hatchback (EU, EP, EV) 03/99 → 02/06 DUAL REFLECTOR	HB4	HB3			PY21W / PY21W	W5W	W5W		W5W	P21/5W	P21W	P21W	W5W
CIVIC VII Hatchback (EU, EP, EV) 03/99 → 02/06 XENON	D2R	HB3			PY21W / PY21W	W5W	W5W		W5W	P21/5W	P21W	P21W	W5W
CIVIC VII Notchback (ES) 02/01 → 09/05 SINGLE REFLECTOR	H4				PY21W / PY21W	W5W/ WY5W	W5W		W5W	P21/5W	P21W	P21W	W5W
CIVIC VII Notchback (ES) 02/01 → 09/05 DUAL REFLECTOR	HB4	HB3			PY21W / PY21W	W5W/ WY5W	W5W		W5W	P21/5W	P21W	P21W	W5W
CIVIC VIII Hatchback (FN, FK) 09/05 →	H7	H1			PY21W / W21W	LED	W5W		P21/5W	P21/5W	W21W	W16W	W5W
CIVIC VIII Hatchback (FN, FK) 09/05 → XENON	D2R	H1			PY21W / W21W	LED	W5W		P21/5W	P21/5W	W21W	W16W	W5W
CIVIC VIII Notchback (FD, FA) 09/05 →	H7	H1	H11		PY21W / W21W	LED	W5W		P21/5W	P21/5W	W21W	W16W	W5W
CIVIC VIII Notchback (FD, FA) 09/05 → XENON	D2R	H1	H11		PY21W / W21W	LED	W5W		P21/5W	P21/5W	W21W	W16W	W5W
CIVIC IX (FK) 02/12 →	H7	H7	H11	LED	PY21W / PY21W		W5W		LED	LED	W21W	W16W	W5W
CIVIC IX (FK) 02/12 → BI-XENON			H11	LED	PY21W / PY21W		W5W		LED	LED	W21W	W16W	W5W
CR-V I (RD) 10/95 → 02/02	H4	H4			WY21W / W21W	W5W	W5W		W21/5W	W21/5W	W21W	W21W	W5W
CR-V II (RD_) 12/01 → 09/06	H4	H4	HB4		P21W / P21W	W5W	W5W	W21W	W21W	P21/5W	P21W	P21W	W5W
CR-V III 10/06 →	H1	HB3	H11		WY21W / WY21W		W5W	W21W	W21W	W21/5W	W21W	W21W	W5W
CR-V III 10/06 → XENON	D2S	HB3	H11		WY21W / WY21W		W5W		W21W	W21/5W	W21W	W21W	W5W
CR-V IV 01/12 →	H11	HB3	H11	LED	WY21W / WY21W		LED		LED	LED	W21W	W21W	W5W
CR-V IV 01/12 → BI-XENON			H11	LED	WY21W / WY21W		LED		LED	LED	W21W	W21W	W5W
CRX III (EH, EG) 03/92 → 12/98	H4	H4			P21W/ P21W		W5W		P21/5W	P21/5W	P21W	P21W	W5W
CR-Z (ZF1) 06/10 →	H11	HB3	H11		WY21W / WY21W	LED	LED		LED	LED	W21W	W16W	W5W

CR-Z (ZF1) 06/10 → XENON	D4S	HB3	H11		WY21W / WY21W	LED	LED		LED	LED	W21W	W16W	W5W
FR-V (BE) 08/04 →	H4	H4	H11		WY21W / WY21W		W5W		W21/5W	W21/5W	W21W	W21W	W5W
FR-V (BE) 08/04 → BI-XENON	D2S	D2S	H11		WY21W / WY21W		W5W		W21/5W	W21/5W	W21W	W21W	W5W
HR-V (GH) 03/99 → TAIL/STOPLIGHT	H1	H1	H3		PY21W / PY21W		W5W		W21/5W	W21/5W	W21W	W21W	W5W
HR-V (GH) 03/99 → TAILLIGHT	H1	H1	H3		PY21W / PY21W		W5W		W21/5W	W5W	W21W	W21W	W5W
INSIGHT (ZE) 04/00 → 12/06 TAIL/STOPLIGHT	H4	H4	H11		WY21W / W21W	WY5W	W5W		W21/5W	W5W	P21W	W16W	W5W
INSIGHT (ZE) 04/00 → 12/06 TAILLIGHT	H4	H4	H11		WY21W / W21W	WY5W	W5W		W21/5W	W21/5W	P21W	W16W	W5W
INSIGHT 04/09 → TAIL/STOPLIGHT	H11	HB3	H1		WY21W / W21W	WY5W	W5W		LED	LED	W21W	W16W	W5W
INSIGHT 04/09 → XENON	D2S	HB3	H1		WY21W / W21W	WY5W	W5W		LED	LED	W21W	W16W	W5W
INTEGRA Coupe (DC2, DC4) 01/97 → 11/01	HB4	HB3			PY21W / PY21W	W5W	W5W		P21/5W	P21/5W	P21W	P21W	W5W
JAZZ II (GD) 03/02 → 07/08	H4	H4	H1		PY21W / PY21W	W5W	W5W		W21/5W	W21/5W	W21W	W21W	W5W
JAZZ III (GE) 07/08 →	H4	H4	H11		P21W / P21W	W5W	W5W		P21/5W	P21/5W	P21W	P21W	W5W
JAZZ III (GE) 07/08 → XENON	D2R	H4	H11		P21W / P21W	W5W	W5W		P21/5W	P21/5W	P21W	P21W	W5W
LEGEND III (KA9) 02/96 →	H4	H4	H1		PY21W / PY21W	W5W	W5W		W21/5W	W21/5W	W21W	W21W	W5W
LEGEND III (KA9) 02/96 → XENON	D2S	H1	H1		PY21W / PY21W	W5W	W5W		W21/5W	W21/5W	W21W	W21W	W5W
LEGEND IV (KB_) 05/06 →	H4	H4	H1		PY21W / PY21W	W5W	W5W		W21/5W	W21/5W	W21W	W21W	W5W
LEGEND IV (KB_) 05/06 → XENON	D2S	H1	H1		PY21W / PY21W	W5W	W5W		W21/5W	W21/5W	W21W	W21W	W5W
LOGO (GA3) 03/99 → 03/02	H4	H4			PY21W / PY21W	W5W	W5W	W21W	W21W	P21/5W	P21W	W21W	W5W
NSX Coupe, Convertible (NA) 03/95 → 12/00	H1	H1	H7		P21W / P21W	W5W	W5W		P21/5W	P21/5W	P21W	P21W	W5W
NSX Coupe, Convertible (NA) 01/01 → 09/05	HB3	H1	H7		P21W / P21W	W5W	W5W		P21/5W	P21/5W	P21W	P21W	W5W
PRELUDE IV (BB) 12/91 → 02/97	H4	H4			P21W / P21W	W5W	W5W		P21/5W	P21/5W	P21W	P21W	W5W
PRELUDE V (BB) 10/96 → 10/00	H1	H1			PY21W / PY21W	W5W	W5W		P21/5W	P21/5W	P21W	P21W	W5W
S2000 (AP) 03/96 →	D2S	H1			PY21W / W21W	WY5W	W5W		W21/5W	W21/5W	P21W	W21W	W5W
SHUTTLE (RA) 06/94 → 06/04	H4	H4			P21W / P21W	W5W	W5W		W21/5W	W21/5W	W21W	W21W	W5W
STREAM (RN) 05/01 →	H4	H4	H11		WY21W / W21W	WY5W	W5W	W5W	W21W	W5W	W21W	W21W	W5W
HYUNDAI													
ACCENT I (X-3) 10/94 → 01/00	H4	H4	H1		P21W / PY21W	W5W	W5W		P21/5W	P21/5W	P21W	P21W	W5W
ACCENT I Notchback (X-3) 10/94 → 01/00	H4	H4	H1		P21W / PY21W	W5W	W5W		P21/5W	P21/5W	P21W	P21W	W5W
ACCENT II (LC) 01/00 → 11/05	H4	H4	H3		P21W / P21W	WY5W	W5W	W16W	P21/5W	P21/5W	P21W	P21W	W5W
ACCENT II Notchback (LC) 09/99 → 11/05	H4	H4	H3		P21W / P21W	WY5W	W5W	W16W	P21/5W	P21/5W	P21W	P21W	W5W
ACCENT III (MC) 11/05 → 11/10	H4	H4			P21W / PY21W	WY5W	W5W	W16W	P21/5W	P21/5W	P21W	W16W	C5W
ACCENT III Notchback (MC) 01/05 → 11/10	H4	H4			P21W / PY21W	WY5W	W5W	W16W	P21/5W	P21/5W	P21W	W16W	C5W
ACCENT IV Notchback (RB) 11/10 →	H4	H4	H27W/2		P21W / PY21W	WY5W	W5W	W16W	P21/5W	P21/5W	P21W	W16W	W5W
ATOS (MX) 02/98 →	H4	H4	H3		P21W / PY21W	W5W	W5W	W16W	P21/5W	P21/5W	P21W	P21W	W5W
ATOS PRIME (MX) 08/99 →	H4	H4	H3		P21W / PY21W	W5W	W5W	W16W	P21/5W	P21/5W	P21W	P21W	W5W
COUPE (GK) 08/01 → 08/09	H7	H7	HB4		P21W / PY21W	W5W / WY5W	W5W		P21/5W	P21/5W	P21W	P21W	W5W
COUPE (RD) 06/96 → 04/02	H4	H4	H3		P21W / PY21W	W5W	W5W	W16W	P21/5W	P21/5W	P21W	P21W	W5W
ELANTRA (XD) 06/00 → 07/06	H1	H1	H3		P21W / PY21W	W5W	W5W	W16W	P21/5W	P21/5W	P21W	P21W	W5W
ELANTRA Notchback (XD) 06/00 - 07/06	H1	H1	H3		P21W / PY21W	W5W	W5W	W16W	P21/5W	P21/5W	P21W	P21W	W5W
ELANTRA Notchback (HD) 06/06 → 12/11	H7	H1			P21W / PY21W	W5W	W5W		P21/5W	P21/5W	P21W	W16W	C5W
GALLOPER II (JK-01) 08/98 → 12/03	H4	H4			P21W / P21W	W5W	W5W		P21/5W	P21/5W	P21W	P21W	T4W
GENESIS (BH) 01/08 → XENON	D1S	H7	H8		PY21W / PY21W	LED	W5W		LED	LED	LED	W16W	C5W
GENESIS Coupe 01/08 →	H7	H7	H8		PY21W / PY21W		LED		LED	LED	H21W	W16W	W5W
GENESIS Coupe 01/08 → XENON	D1S	H7	H8		PY21W / PY21W		LED		LED	LED	H21W	W16W	W5W
GENESIS (DH) 06/14 →	D3S				PY21W / PY21W		LED		LED	LED	LED	W16W	LED
GETZ (TB) 08/02 → 06/09	H4	H4	H27W/2		PY21W / PY21W	WY5W	W5W	W16W	P21/5W	P21/5W	P21W	P21W	W5W

GRANDEUR (TG) 04/05 →	H7	H7	H3		PY21W / PY21W		W5W		LED	LED	P21W	W21W	W5W
GRANDEUR (HG) 01/11 →	H7	H7	H8		P27W / P27W	LED	LED		LED	LED	LED	W16W	W5W
GRANDEUR (HG) 01/11 → XENON	D1S	H7	H8		P27W / P27W	LED	LED		LED	LED	LED	W16W	W5W
H-1 Box 03/00 - 12/07	H4	H4	H3		PY21W / PY21W	WY5W	W5W		P21W	P21/5W	P21W	P21W	W5W
H-1 Cargo 02/08 →	H4	H4	H7		PY21W / PY21W	WY5W	W5W	W5W	W5W	P21/5W	P21W	W16W	W5W
H-1 Travel 02/08 →	H7	H1			PY21W / PY21W	WY5W	W5W	W5W	W5W	P21/5W	P21W	W16W	W5W
H-1 / STAREX 06/97 → 12/07 SINGLE REFLECTOR	H4	H4	H1		PY21W / PY21W	W5W	W5W		P21W	P21/5W	P21W	P21W	W5W
H-1 / STAREX 06/97 → 12/07 DUAL REFLECTOR	H3	H7	H1		PY21W / PY21W	W5W	W5W		P21W	P21/5W	P21W	P21W	W5W
H-1 / STAREX Bus (KMF) 10/97 → 04/04 SINGLE REFLECTOR	H4	H4	H1		PY21W / PY21W	W5W	W5W		P21W	P21/5W	P21W	P21W	W5W
H-1 / STAREX Bus (KMF) 10/97 → 04/04 DUAL REFLECTOR	H3	H7	H1		PY21W / PY21W	W5W	W5W		P21W	P21/5W	P21W	P21W	W5W
H100 Box 07/93 → 10/04	H4	H4	H1		P21W / PY21W		W5W		P21/5W	P21/5W	P21W	P21W	R10W
H100 Bus (P) 07/93 → 10/04	H4	H4	H1		P21W / PY21W		W5W		P21/5W	P21/5W	P21W	P21W	R10W
HIGHWAY VAN 03/00 → SINGLE REFLECTOR	H4	H4	H1		PY21W / PY21W	W5W	W5W	W16W	P21/5W	P21/5W	P21W	P21W	W5W
HIGHWAY VAN 03/00 → DUAL REFLECTOR	H3	H7	H1		PY21W / PY21W	W5W	W5W	W16W	P21/5W	P21/5W	P21W	P21W	W5W
i10 (IA) 12/13 →	H4	H4	H8		PY21W / PY21W	W5W	W5W		P21/5W	P21/5W	P21W	W16W	W5W
i10 (PA) 10/07 →	H4	H4	H27W/2		PY21W / PY21W	WY5W	W5W	W5W	P21/5W	P21/5W	P21W	W16W	C5W
i20 (PB, PBT) 08/08 → SINGLE REFLECTOR	H4	H4			PY21W / PY21W	WY5W	W5W	W5W	P21/5W	P21/5W	P21W	W16W	W5W
i20 (PB, PBT) 08/08 → DUAL REFLECTOR	H7	H7			PY21W / PY21W	WY5W	W5W	W5W	P21/5W	P21/5W	P21W	W16W	W5W
i30 (FD) 10/07 → 11/11	H7	H1			PY21W / PY21W		W5W		P21/5W	P21/5W	P21/5W	W16W	W5W
i30 (GD) 11/11 →	H7	H7	H8	LED	PY21W / PY21W	WY5W	W5W		P21/5W	P21/5W	P21W	W16W	W5W
i30 (GD) 11/11 → XENON	D1S	H7	H8	LED	PY21W / PY21W	WY5W	W5W		LED	LED	P21W	W16W	W5W
i30 CW (FD) 10/07 → 06/12	H7	H1	H27W/1		PY21W / PY21W		W5W		P21/5W	P21/5W	P21/5W	W16W	W5W
i30 CW (GD) 06/12 →	H7	H7	H8	LED	PY21W / PY21W	WY5W	W5W		P21/5W	P21/5W	P21W	W16W	W5W
i30 CW (GD) 06/12 → XENON	D1S	H7	H8	LED	PY21W / PY21W	WY5W	W5W		LED	LED	P21W	W16W	W5W
i40 (VF) 03/12 →	H7	H7	H8	LED	PY21W / PY21W	LED	LED		LED	LED	H21W	W16W	W5W
i40 (VF) 03/12 → XENON	D1S	H7	H8	LED	PY21W / PY21W	LED	LED		LED	LED	H21W	W16W	W5W
i40 CW (VF) 07/11 →	H7	H7	H8	LED	PY21W / PY21W	LED	LED		LED	LED	H21W	W16W	W5W
i40 CW (VF) 07/11 → XENON	D1S	H7	H8	LED	PY21W / PY21W	LED	LED		LED	LED	H21W	W16W	W5W
ix20 (JC) 11/10 →	H7	H7	H27W/1		P21W / P21W	W5W	W5W		P21/5W	P21/5W	P21W	W16W	W5W
ix35 (LM; EL, ELH) 01/10 →	H7	H7			PY21W / PY21W		W5W		P21/5W	P21/5W	P21W	W16W	W5W
ix55 09/08 →	H7	H7	HB4		PY21W / PY21W	LED	W5W		LED	LED	P21W	W16W	C5W
LANTRA II (J-2) 06/95 → 10/00	H4	H4	H3		P21W / PY21W	W5W	W5W	P21W	P21/5W	P21/5W	P21W	P21W	C5W
LANTRA II Wagon (J-2) 02/96 → 10/00	H4	H4	H3		P21W / PY21W	W5W	W5W	P21W	P21/5W	P21/5W	P21W	P21W	C5W
MATRIX (FC) 06/01 → 08/10	H4	H4	H3		P21W / PY21W	WY5W	W5W	P21W	P21/5W	P21/5W	P21W	P21W	W5W
SANTA FÉ I (SM) 11/00 → 03/06	H4	H4	H3		P21W / PY21W	W5W	W5W	P21W	P21/5W	P21/5W	P21W	P21W	C5W
SANTA FÉ II (CM) 03/06 →	H7	H7	H27W/2		PY21W / PY21W	WY5W	W5W / H6W		P21/5W	P21/5W	P21W	W16W	W5W
SANTA FÉ II (CM) 03/06 → XENON	D1S	H7	H27W/2		PY21W / PY21W	WY5W	W5W / H6W		P21/5W	P21/5W	P21W	W16W	W5W
SANTA FÉ III (DM) 09/12 →	H7	H7	H8	LED	PY21W / PY21W		W5W		P21/5W	P21/5W	P21W	W16W	W5W
SANTA FÉ III (DM) 09/12 → XENON	D3S	H7	H8	LED	PY21W / PY21W		LED		P21/5W	P21/5W	P21W	W16W	W5W
SANTAMO 10/98 →	H4	H4			P21W / P21W	W5W	W5W		P21/5W	P21/5W	P21W	P21W	T4W
SONATA III (Y-3) 05/93 → 08/98	H7	H7			P21W / PY21W	W5W	W5W	P21W	P21W	P21/5W	P21W	P21W	W5W
SONATA IV (EF) 03/98 → 05/05 SINGLE REFLECTOR	H4	H4	H3		P21W / PY21W	W5W / WY5W	W5W		P21W	P21/5W	P21W	P21W	W5W
SONATA IV (EF) 03/98 → 05/05 DUAL REFLECTOR	H7	H7	H3		P21W / PY21W	W5W / WY5W	W5W		P21W	P21/5W	P21W	P21W	W5W
SONATA V (NF) 01/05 → 12/10	H1	H7	HB4		P21W / PY21W	WY5W	W5W		P21/5W	P21/5W	P21W	P21W	W5W
STAREX 06/97 →	H4		H3		PY21W / PY21W		W5W		P21/5W	P21/5W	P21W	P21W	W5W
TERRACAN (HP) 06/01 → 12/06	H7	H7	H3		P21W / PY21W	WY5W	W5W	P21W	P21/5W	P21/5W	P21W	P21W	W5W

TRAJET (FO) 03/00 → 07/08	H7	H3	H1		P21W / PY21W	W5W	W5W		P21/5W	P21/5W	P21W	P21W	W5W
TUCSON (JM) 08/04 → 03/10	H4	H4	H27W/2		PY21W / PY21W	WY5W	W5W		P21/5W	P21/5W	P21W	W16W	C5W
VELOSTER 03/11 →	H7	H7	H27W/2		PY21W / PY21W				P21/5W	P21/5W	P21W	W16W	W5W
XG (XG) 12/98 → 10/02	H7	H1	H3		P21W / PY21W	W5W / WY5W	W5W		P21/5W	P21/5W	P21W	P21W	W5W
XG XG 11/02 → 12/05	H7	H1	HB4		P21W / PY21W	W5W / WY5W	W5W		P21/5W	P21/5W	P21W	P21W	W5W
ISUZU													
TROOPER (UBS) 08/91 → 04/00	H4	H4	H3		P21W / P21W	W5W	R5W		P21/5W	P21/5W	P21W	P21W	W5W
TROOPER 04/00 →	H4	H4	H3		P21W / P21W	W5W	R5W		P21/5W	P21/5W	P21W	P21W	W5W
IVECO													
IVECO Daily I/II 01/78 → 04/99	H4	H4	H3		P21W / W5W	P21W	T4W		P21W	R5W	P21W	P21W	R5W
DAILY III Box/Estate 05/99 → 07/06	H4	H4	H3		P21W / P21W		T4W		P21W	R5W	P21W	P21W	R5W
DAILY IV Box/Estate 05/06 → 08/12	H1	H1	H1		P21W / PY21W	W16W	W5W		P21W	R5W	P21W	P21W	W5W
DAILY V Box/Estate 09/11 → 02/14	H7	H7	H1		PY21W / P21W	WY5W	W5W		P21W	R5W	P21W	P21W	W5W
DAILY VI Box/Estate 03/14 →	H7	H1	H1	P21W	PY21W / PY21W		W5W		P21W	R5W	P21W	P21W	W5W
MASSIF Pick-up 10/08 →	H7	H7			P21W / PY21W	W5W	W5W		P21W	R10W	P21W	P21W	C5W
MASSIF Single Cab 10/08 →	H7	H7			P21W / PY21W	WY5W	W5W		P21W	R10W	P21W	P21W	C5W
MASSIF Station Wagon 10/08 →	H7	H7			P21W / PY21W	WY5W	W5W		P21W	R10W	P21W	P21W	C5W
JAGUAR													
S-TYPE (CCX) 01/99 → 10/07	H7	HB3	H3		PY21W / PY21W	W5W	W5W		P21/4W	R5W	P21W	P21W	W5W
X-TYPE (CF1) 06/01 → 11/09	H1	H1	H1		PY21W / PY21W	W5W	W5W		P21/5W	P21/5W	P21W	P21W	W5W
X-TYPE (CF1) 06/01 → 11/09 XENON	D2S	H1	H1		PY21W / PY21W	W5W	W5W		P21/5W	P21/5W	P21W	P21W	W5W
X-TYPE Estate 11/03 - 12/09	H1	H1	H1		P21W / PY21W	WY5W	W5W		P21/5W	P21/5W	P21W	P21W	W5W
X-TYPE Estate 11/03 - 12/09 XENON	D2S	H1	H1		P21W / PY21W	WY5W	W5W		P21/5W	P21/5W	P21W	P21W	W5W
XE (X760) 03/15 →	H7	H15		H15	/ W16W		LED		W16W	LED	LED	W16W	LED
XF (_J05_, CC9) 03/08 →	H7	H7		LED	PY21W / PY21W	WY5W	W5W		LED	LED	LED	LED	W5W
XF (_J05_, CC9) 03/08 → XENON	D1S	H7		LED	PY21W / PY21W	WY5W	W5W		LED	LED	LED	LED	W5W
XF (_J05_, CC9) 03/08 → BI-XENON	D3S	D3S		LED	PY21W / PY21W	WY5W	W5W		LED	LED	LED	LED	W5W
XJ (X300) 11/94 → 07/97 tail/stoplight	H1	H1	H3		P21W / PY21W	W5W	W5W	W5W	P21/5W	P21/5W	P21W	P21W	C5W
XJ (X300) 11/94 → 07/97 stoplight	H1	H1	H3		P21W / PY21W	W5W	W5W	W5W	P21/5W	R5W	P21W	P21W	C5W
XJ (NAW, NBW) 07/97 → 05/03	H7	H7	HB4		PY21W / PY21W	W5W	W5W	W5W	P21/5W	P21/5W	P21W	P21W	C5W
XJ (X350, X358) 05/03 → 03/09	H1	H1	H3		PY21W / PY21W	WY5W	W5W		P21/5W	P21/5W	P21W	P21W	W5W
XJ (X350, X358) 05/03 → 03/09 XENON	D2S	H1	H3		PY21W / PY21W	WY5W	W5W		P21/5W	P21/5W	P21W	P21W	W5W
XJ (_J12_, _J24_, X 351) 10/09 →	D3S	D3S		LED		LED	LED		LED	LED	LED	LED	W5W
XJS Coupe, convertible 09/75 → 03/96	H4	H4			P21W / P21W		T4W		P21W	R5W	P21W		C5W
XK 8 Convertible (QDV, QEV) 03/96 → 07/05	HB3	H1	H3		PY21W / PY21W	W5W	W5W		P21W	R5W	P21W	P21W	W5W
XK 8 Convertible (QDV, QEV) 03/96 → 07/05 XENON	D2S	H1	H3		PY21W / PY21W	W5W	W5W		P21W	R5W	P21W	P21W	W5W
XK 8 Coupe (QDV, QEV) 03/96 → 07/05	HB3	H1	H3		PY21W / PY21W	W5W	W5W		P21W	R5W	P21W	P21W	W5W
XK 8 Coupe (QDV, QEV) 03/96 → 07/05 XENON	D2S	H1	H3		PY21W / PY21W	W5W	W5W		P21W	R5W	P21W	P21W	W5W
XK Convertible, Coupe (_J43_) 03/06 → 07/14 Bi-XENON	D1S	D1S	H11		PY21W / PY21W	WY5W	W5W		P21/5W	P21/5W			W5W
JEEP													
CHEROKEE (KJ) 09/01 → 01/08	H4	H4			P21W/ P21W	W5W	W5W	W16W	W16W	P21/5W	P21W	P21W	W5W
CHEROKEE (KK) 01/08 →	H11	HB3	H10		P27/7W / P27/7W	W5W / WY5W	W5W		P27/7W	P27/7W	P27/7W	P21W	W5W
CHEROKEE (KK) 01/08 → XENON	D1S	HB3	H10		P27/7W / P27/7W	W5W / WY5W	W5W		P27/7W	P27/7W	P27/7W	P21W	W5W
CHEROKEE (XJ) 10/84 → 09/01	H4	H4	H3		P27/7W / P27/7W	W5W	T4W	W16W	W16W	P27/7W	P27/7W	P27/7W	W5W
COMMANDER (XK) 09/05 → 12/10	H11	HB4	H10		P21W / PY21W	WY5W	P27/7W		P27/7W	P27/7W	P27W	P27W	W5W
COMPASS (MK49) 08/06 →	H4	H4	H10		P27/7W / P27/7W	W5W			P27/7W	P27/7W	P27/7W	P27/7W	W5W

GRAND CHEROKEE I (ZJ) 09/91 → 04/99	H4	H4			P21W / P21W	W3W	T4W		P21/5W	P21/5W	P21W	P21W	C5W
GRAND CHEROKEE II (WJ, WG) 10/98 → 09/05	HB4	HB3			P27/7W / P27/7W	T4W	T4W	W16W	W16W	P27/7W	P27/7W	P27/7W	W5W
GRAND CHEROKEE III (WH) 06/05 → 12/10	HB4	HB3	H10		P27/7W / P27/7W	WY5W	W5W		P27/7W	P27/7W	P21W	P27/7W	W5W
GRAND CHEROKEE III (WH) 06/05 → 12/10 XENON	D1S	HB3	H10		P27/7W / P27/7W	WY5W	W5W		P27/7W	P27/7W	P21W	P27/7W	W5W
GRAND CHEROKEE IV (WK) 11/10 → BI-XENON	D1S	D1S	P27/7W		WY21W / WY21W	WY5W	P27/7W		P27/7W	P27/7W	W21W	W16W	W5W
PATRIOT (MK74) 02/07 →	H4	H4	H10			WY5W	W5W		P27/7W	P27/7W	P27/7W	W16W	W5W
RENEGADE (BU) 07/14 →	H4	H4	H11	P21/5W	PY21W / W16W	WY5W	P21/5W		P21W	P21W	W16W	W16W	W5W
WRANGLER I (YJ, SJ_) 08/86 → 08/96	H4	H4			P21W / P21W		R10W		P21/5W	P21/5W	P21W	P21W	C5W
WRANGLER II (TJ) 08/96 → 12/08	H4	H4			P21W / P21W	W5W	T4W	W16W	W16W	P21/5W	P21W	P21W	W5W
WRANGLER III (JK) 04/07 →	H4	H4	H10			WY5W	W5W		P27/7W	P27/7W	P27/7W	W16W	W5W
KIA													
BESTA Box, Van → 12/03	H4		H1		P21W / PY21W	W5W	T4W	P21W	P21/5W	P21/5W	P21W	P21W	W5W
CARENS I (FC) 11/00 → 10/02	H4				PY21W / PY21W	W5W	W5W	P21W	P21/5W	P21/5W	P21W	P21W	W5W
CARENS II (FJ) 07/02 →	H4				PY21W / PY21W	WY5W	W5W		P21/5W	P21/5W	P21W	P21W	W5W
CARENS III (UN) 09/06 →	H7	H1			P21W / PY21W	WY5W	W5W		P21/5W	P21/5W	P21W	P21W	C5W
CARENS IV 03/13 →	H7	H7	H8	LED	PY21W / PY21W	WY5W			P21/5W	P21/5W	P21W	W16W	W5W
CARENS IV 03/13 → XENON	D3S	H7	H8	LED	PY21W / PY21W	WY5W			LED	LED	P21W	W16W	W5W
CARNIVAL (UP) 08/99 → 10/01	H4		H1		PY21W / PY21W	W5W	W5W	P21W	P21/5W	P21/5W	P21W	P21W	W5W
CARNIVAL II (GQ) 01/00 → 08/05	H7	H7			PY21W / PY21W	WY5W	W5W		P21/5W	P21/5W	P21W	P21W	W5W
CARNIVAL / GRAND CARNIVAL III (VQ) 09/05 →	H7	H7	H8		PY21W / PY21W	WY5W	W5W		P27/7W	P27/7W	P21W	W16W	W5W
CEE'D Hatchback (ED) 12/06 →	H7	H1	H27W/1		P21W / PY21W	WY5W	W5W		P21/5W	P21/5W	P21W	P21W	C5W
CEE'D SW (ED) 09/07 →	H7	H1	H27W/1		PY21W / PY21W	WY5W	W5W		P21/5W	P21/5W	P21W	P21W	C5W
CEE'D 05/12 →	H7	H7	H8	P21/5W	PY21W / PY21W		W5W / P21/5W		P21/5W	P21/5W	P21W	W16W	W5W
CEE'D 05/12 → XENON	D1S	H7	H8	LED	PY21W / PY21W		LED		LED	LED	P21W	W16W	W5W
CEE'D Sportswagon 09/12 →	H7	H7	H8	P21/5W	PY21W / PY21W		W5W / P21/5W		P21/5W	P21/5W	P21W	P21W	W5W
CEE'D Sportswagon 09/12 → XENON	D1S	H7	H8	LED	PY21W / PY21W		LED		LED	LED	P21W	P21W	W5W
CERATO (LD) 03/04 →	H4		HB4		P27/7W / P27/7W	WY5W	W5W	W5W	P21/5W	P21/5W	P21W	W16W	W5W
CERATO Notchback (LD) 04/04 →	H4		H27W/2		P27/7W / P27/7W	WY5W	W5W	W5W	P21/5W	P21/5W	P21W	W16W	W5W
CLARUS (K9A) 07/96 →	H4		H1		PY21W / PY21W	W5W	W5W	P21W	P21/5W	P21/5W	P21W	P21W	W5W
CLARUS Estate (GC) 05/98 →	H4		H1		PY21W / PY21W	W5W	W5W		P21/5W	P21/5W	P21W	P21W	W5W
JOICE 02/00 →	H4				PY21W / PY21W	W5W	W5W	P21W	P21/5W	P21/5W	P21W	P21W	T4W
K2500 (SD) 01/03 →	H4				P21W / P21W	W5W	W5W		P27/7W	P27/7W	P27W	P27W	R10W
MAGENTIS (GD) 05/01 →10/05	H7	H7	H1		P21W / PY21W	WY5W	W5W		P21/5W	P21/5W	P21W	P21W	R5W
MAGENTIS (MG) 11/05 →	H7	H1			P21W / PY21W	WY5W	W5W		P21W	W5W	P21W	P21W	W5W
MENTOR 01/94 →	H4				P21W / P21W		W5W		P21/5W	P21/5W	P21W	P21W	W5W
OPIRUS (GH) 09/03 →	H7	H7			LED / PY21W	WY5W	W5W		P21/5W	P21/5W	P21W	P21W	C5W
OPTIMA 01/10 →	H7	H1	H8	LED	PY21W / PY21W		W5W		LED	LED	LED	W16W	W5W
OPTIMA 01/10 → XENON	D1S	H1	H8	LED	PY21W / PY21W		W5W		LED	LED	LED	W16W	W5W
PICANTO (BA) 04/04 → 04/11	H4		H27W/2		PY21W / PY21W	WY5W	W5W		P21/5W	P21/5W	P21W	P21W	W5W
PICANTO (TA) 05/11 → SINGLE REFLECTOR	H4		H27W/2	P21W	P21W / PY21W	WY5W	W5W	W5W	P21/5W	P21/5W	P21W	W16W	W5W
PICANTO (TA) 05/11 → DUAL REFLECTOR	H7	H7	H27W/2	LED	P21W / PY21W	WY5W	W5W	W5W	P21/5W	P21/5W	P21W	W16W	W5W
PREGIO Box (TB) 10/97 →	H4		H1		P21W / PY21W	W5W	T4W	P21W	P21/5W	P21/5W	P21W	P21W	W5W
PRIDE (DA) 01/90 →	H4				P21W / P21W	W5W	W5W		P21/5W	P21/5W	P21W	P21W	W5W
PRIDE Estate 08/99 →	H4				P21W / P21W	W5W	W5W	P21W	P21/5W	P21/5W	P21W	P21W	W5W

PRO CEE'D (ED) 02/08 →	H7	H1			P21W / PY21W	WY5W	W5W		P21/5W	P21/5W	P21W	P21W	C5W
PRO CEE'D 03/13 →	H7	H7	H8	P21/5W	PY21W / PY21W		W5W / P21/5W		P21/5W	P21/5W	P21W	W16W	W5W
PRO CEE'D 03/13 → XENON	D1S	H7	H8	LED	PY21W / PY21W		LED		LED	LED	P21W	W16W	W5W
RETONA (CE) 06/99 →	H4				P21W / P21W	W5W	W5W	P21W	P21/5W	P21/5W	P21W	P21W	P21W
RIO (DC_) 09/00 → 02/05	H4				P21W / PY21W	W5W	W5W		P21/5W	P21/5W	P21W	P21W	W5W
RIO II (JB) 03/05 →	H4				PY21W / PY21W	WY5W	W5W	W21W	P21W	W5W	P21W	P21W	W5W
RIO II Hatchback (JB) 03/05 →	H4				PY21W / PY21W	WY5W	W5W	W21W	P21W	W5W	P21W	P21W	W5W
RIO III (UB) 09/11 →	H7	H7	HB4	P21/5W / LED	PY21W / PY21W		P21/5W		P21/5W	W5W	P21W	W16W	W5W
RIO III Notchback (UB) 09/10 →	H4		H8	P21W	PY21W / PY21W		W5W / LED		P21/5W / LED	W5W / P21/5W / LED	P21W	W16W	W5W
RIO Kombi (DC) 08/00 → 02/05	H4				P21W / PY21W	W5W	W5W		P21/5W	P21/5W	P21W	P21W	W5W
SEPHIA (FA) 01/95 → 10/97	H4				P21W / PY21W	W5W	W5W		P21/5W	P21/5W	P21W	P21W	W5W
SEPHIA Notchback (FA) 09/93 → 10/97	H4				P21W / PY21W	W5W	W5W		P21/5W	P21/5W	P21W	P21W	W5W
SHUMA (FB) 10/97 → 12/01 TAIL/STOPLIGHT	H1	H1			P21W / PY21W	W5W	W5W		P21/5W	P21/5W	P21W	P21W	W5W
SHUMA (FB) 10/97 → 12/01 TAILLIGHT	H1	H1			P21W / PY21W	W5W	W5W		P21/5W	R5W	P21W	P21W	W5W
SHUMA II (FB) 05/01 → 08/04	H4				P21W / PY21W	WY5W	W5W	P21W	P21/5W	P21/5W	P21W	P21W	W5W
SHUMA II Hatchback (FB) 05/01 → 05/04	H4				P21W / PY21W	WY5W	W5W	P21W	P21/5W	P21/5W	P21W	P21W	W5W
SORENTO I (JC) 08/02 → 10/09	H7	H1			PY21W / PY21W	WY5W	W5W		P21/5W	P21/5W	P21W	P21W	W5W
SORENTO II (XM) 11/09 → 2012	H7	H1	H27W/2		PY21W / PY21W	WY5W	W5W		P21/5W	P21/5W	P21W	W16W	C5W
SORENTO II (XM) 11/09 → 2012 XENON	D1S	H1	H27W/2		PY21W / PY21W	WY5W	LED		P21/5W	P21/5W	P21W	W16W	C5W
SORENTO II (XM) 2013 →	H7	H7	H8	LED	PY21W / PY21W	WY5W	W5W		P21/5W	P21/5W	P21W	W16W	C5W
SORENTO II (XM) 2013 → XENON	D3S	H7	H8	LED	PY21W / PY21W	WY5W	LED		P21/5W	P21/5W	P21W	W16W	C5W
SOUL (AM) 02/09 → SINGLE REFLECTOR	H4		H27W/2		P21W / PY21W	WY5W	W5W / P21/5W	W5W	P21/5W	P21/5W	P21W	W16W	W5W
SOUL (AM) 02/09 → DUAL REFLECTOR	H7	H7	H27W/2	P21/5W	P21W / PY21W	WY5W	W5W / P21/5W	W5W	P21/5W	P21/5W	P21W	W16W	W5W
SOUL II (PS) 02/14 → SINGLE REFLECTOR	H4	H4	H8	P21 / 5W	PY21W / PY21W	LED	P21/5W		P21/5W	P21/5W /W5W	P21W	W16W	W5W
SOUL II (PS) 02/14 → DUAL REFLECTOR	H7	H7	H8	LED	PY21W / PY21W	LED	LED		LED	W5W	P21W	W16W	W5W
SOUL II (PS) 02/14 → XENON	D3S		H8	LED	PY21W / PY21W	LED	LED		LED	W5W	P21W	W16W	W5W
SPORTAGE (JE_) 09/04 →	H4				PY21W / PY21W	WY5W	W5W		P21/5W	P21/5W	P21W	W16W	W5W
SPORTAGE (K00) 04/94 → 04/04	H4				P21W / PY21W	W5W	W5W	P21W	P21/5W	P21/5W	P21W	P21W	W5W
SPORTAGE (SL) 07/10 →	H7	H7	H27W/1	LED	P21W / PY21W	LED	LED		LED	LED	P21W	W16W	W5W
VENGA (YN) 02/10 →	H7	H1			PY21W / PY21W	WY5W	W5W		P21/5W	P21/5W	P21W	W16W	W5W
LADA													
110 01/95 →	H1	H1			P21W / PY21W	WY5W	W5W		P21W	P21/4W	P21/4W	P21W	C5W
111 01/95 →	H1	H1			P21W / PY21W	WY5W	W5W		P21W	P21/4W	P21/4W	P21W	C5W
112 01/95 →	H1	H1			P21W / PY21W	WY5W	W5W		P21W	P21/4W	P21/4W	P21W	C5W
FORMA 01/86 →	H4	H4	H3		P21W / P21W	WY5W	R5W		P21W	R5W	P21W	P21W	C5W
KALINA Estate (1117) 10/04 →	H4	H4			P21W / P21W	WY5W	W5W		P21/4W	P21/4W	P21W	P21W	C5W
KALINA Estate (2194) 11/13 →	H7	H1	H11		PY21W /		W5W		P21/4W	P21/4W	P21W	P21W	C5W
KALINA Hatchback (1118) 10/04 →	H7	H1			PY21W / PY21W	WY5W	W5W		P21/4W	P21/4W	P21W	P21W	C5W
KALINA Notchback (1119) 10/04 →	H7	H1			PY21W / PY21W	WY5W	W5W		P21/4W	P21/4W	P21W	P21W	C5W
NIVA (2121) 12/76 → I VAR	R2	R2			P21W / P21W	W5W	R5W	W5W	P21W	T4W	P21W	P21W	C5W
NIVA (2121) 12/76 → II VAR	H4	H4			P21W / P21W	W5W	R5W	W5W	P21W	T4W	P21W	P21W	C5W
NIVA II (2123) 09/02 →	H7	H1	H11		PY21W / PY21W	W5W/ WY5W	W5W		P21W	P21/4W	P21/4W	R10W	C5W

PRIORA Estate (2171) 10/09 →	H7	H1	H11		PY21W / PY21W	WY5W	W5W		P21/5W	P21/5W	P21W	P21W	W5W
PRIORA Hatchback (2170) 12/08 →	H7	H	H11		PY21W / PY21W	WY5W	W5W		P21W	P21/4W	P21/4W	P21W	W5W
PRIORA Notchback (2172) 12/08 →	H7	H1	H11		PY21W / PY21W	WY5W	W5W		P21W	P21/4W	P21/4W	P21W	W5W
SAMARA (2108, 2109, 2115) 01/86 →	H4	H4	H3		P21W / P21W	W5W	R5W		P21W	R5W	P21W	P21W	C5W
SAMARA FORMA (21099) 09/87 →	H4	H4	H3		P21W / P21W	W5W	W5W		P21W	R5W	P21W	P21W	C5W
TAIGA II (2123) 09/02 →	H7	H1	H11		PY21W / PY21W	WY5W	W5W		P21W			R10W	C5W
TOSCANA (2107) 01/96 → 05/12	H4	H4			P21W / P21W		R5W		P21W	R5W	P21W	P21W	T4W
LANCIA													
DEDRA (835) 01/89 → 07/99	H4	H4	H3		P21W / P21W	W5W	W5W	W2,3W	P21W	R5W	P21W	P21W	C5W
DEDRA SW (835) 07/94 → 07/99	H4	H4	H3		P21W / P21W	W5W	W5W	W2,3W	P21W	R5W	P21W	P21W	C5W
DELTA II (836) 06/93 → 09/99	H1	H1	H1		P21W/ PY21W	W5W	W5W		P21W	R5W	P21W	P21W	C5W
DELTA III (844) 09/08 →	H7	H7	H11	LED	LED / LED	WY5W	LED		LED	LED	W16W	W16W	W5W
DELTA III (844) 09/08 → BI-XENON	D1S	D1S	H11	LED	LED / LED	WY5W	LED		LED	LED	W16W	W16W	W5W
FLAVIA Convertible (JS) 03/12 →	HIR2		H11		P27/7W / W16W	WY5W	LED		LED	LED	LED	W16W	W5W
KAPPA (838A)08/94 → 10/01 TAIL/STOPLIGHT	H7	H3	H1		P21W / PY21W	W5W	W5W	W2,3W	P21/5W	P21/5W	P21W	P21W	C5W
KAPPA (838A)08/94 → 10/01 STOPLIGHT	H7	H3	H1		P21W / PY21W	W5W	W5W	W2,3W	P21/5W	R5W	P21W	P21W	C5W
KAPPA (838A)08/94 → 10/01 XENON TAIL/STOPLIGHT	D2S	H3	H1		P21W / PY21W	W5W	W5W	W2,3W	P21/5W	P21/5W	P21W	P21W	C5W
KAPPA (838A)08/94 → 10/01 XENON STOPLIGHT	D2S	H3	H1		P21W / PY21W	W5W	W5W	W2,3W	P21/5W	R5W	P21W	P21W	C5W
KAPPA Coupe (838) 07/96 → 03/01 TAIL/STOPLIGHT	H7	H3	H1		P21W / PY21W	W5W	W5W	W2,3W	P21/5W	P21/5W	P21W	P21W	C5W
KAPPA Coupe (838) 07/96 → 03/01 STOPLIGHT	H7	H3	H1		P21W / PY21W	W5W	W5W	W2,3W	P21/5W	R5W	P21W	P21W	C5W
KAPPA Coupe (838) 07/96 → 03/01 XENON TAIL/STOPLIGHT	D2S	H3	H1		P21W / PY21W	W5W	W5W	W2,3W	P21/5W	P21/5W	P21W	P21W	C5W
KAPPA Coupe (838) 07/96 → 03/01 XENON STOPLIGHT	D2S	H3	H1		P21W / PY21W	W5W	W5W	W2,3W	P21/5W	R5W	P21W	P21W	C5W
KAPPA SW (838B) 07/96 - 10/01 TAIL/STOPLIGHT	H7	H3	H1		P21W / PY21W	W5W	W5W	W2,3W	P21/5W	P21/5W	P21W	P21W	C5W
KAPPA SW (838B) 07/96 - 10/01 STOPLIGHT	H7	H3	H1		P21W / PY21W	W5W	W5W	W2,3W	P21/5W	R5W	P21W	P21W	C5W
KAPPA SW (838B) 07/96 - 10/01 XENON TAIL/STOPLIGHT	D2S	H3	H1		P21W / PY21W	W5W	W5W	W2,3W	P21/5W	P21/5W	P21W	P21W	C5W
KAPPA SW (838B) 07/96 - 10/01 XENON STOPLIGHT	D2S	H3	H1		P21W / PY21W	W5W	W5W	W2,3W	P21/5W	R5W	P21W	P21W	C5W
LYBRA (839AX) 07/99 → 10/05	H7	H7	H1		PY21W / PY21W	WY5W	H6W		P21W	R10W	P21W	P21W	W5W
LYBRA SW (839BX) 07/99 → 10/05	H7	H7	H1		PY21W / PY21W	WY5W	H6W	W21W	P21W	R10W	P21W	P21W	W5W
MUSA (350) 10/04 →	H1/ H7	H1/ H3	H1		PY21W / PY21W	WY5W	W5W	W5W	P21/5W	P21/5W	P21W	P21W	W5W
PHEDRA (179) 09/02 → 11/10	H7	H7	H3		PY21W / PY21W	WY5W	W5W	W5W	P21/5W	P21/5W	P21W	P21W	W5W
PHEDRA (179) 09/02 → 11/10 XENON	D1S	H7	H3		PY21W / PY21W	WY5W	W5W		P21/5W	P21/5W	P21W	P21W	W5W
THEMA (LX) 09/11 → BI-XENON	D3S	D3S	H11	LED	/ WY21W		LED		LED	LED	LED	W16W	W5W
THESIS (841AX) 07/02 → 07/09 XENON	D2S	D2S	H3		PY21W / LED	WY5W	H6W		LED	LED	LED	LED	W5W
VOYAGER 09/11 →	H11	H11	H11				W5W		LED	LED	LED	LED	W5W
VOYAGER 09/11 → XENON	D1S	H11	H11				W5W		LED	LED	LED	LED	W5W
Y (840A) 11/95 → 09/03	H7	H3	H1		PY21W / PY21W	W5W	W5W	W5W	P21/5W	P21/5W	P21W	P21W	C5W
YPSILON (843) 10/03 → 12/11	H7	H3	H1		PY21W / LED	WY5W	W5W	W2,3W	P21/5W	P21/5W	P21W	P21W	LED
YPSILON (846) 05/11 →	H4	H4	H1	W21W	PY21W / LED	W5W	W5W		W16W	W16W	P21W	P21W	W5W
YPSILON (846) 05/11 → BI-XENON	D1S	D1S	H1	W21W	PY21W / LED	W5W	W5W		W16W	W16W	P21W	P21W	W5W
ZETA (220) 05/95 → 09/02	H1	H1	H3		P21W/ PY21W	W5W	W5W	W5W	P21/5W	P21/5W	P21W	P21W	W5W
LANDROVER													
DEFENDER (LD) 09/90 → UP TO IDENT 2A999999	H4	H4			P21W / P21W	W5W	R5W		P21W	R5W	P21W	P21W	T4W
DEFENDER (LD) 09/90 → FROM IDENT 3A000000	H4	H4			P21W / PY21W	W5W	R5W		P21W	R5W	P21W	P21W	T4W
DEFENDER PICKUP (LD_) 10/95 →	H4	H4	H3		P21W / P21W	R5W	R5W		P21/5W	P21/5W	P21W	P21W	T4W
DISCOVERY I (LJ, LG) 10/89 → 10/98	H4	H4	H3		P21W / P21W	R5W	R5W	P21W	P21/5W	P21/5W	P21W	P21W	C5W
DISCOVERY II (LJ, LT) 11/98 → 06/04 SINGLE REFLECTOR	H4	H4	H3		P21W / PY21W	W5W	W5W		P21/5W	R5W	P21W	P21W	C5W

DISCOVERY II (LJ, LT) 11/98 → 06/04 DUAL REFLECTOR	H7	H7	H11		P21W / PY21W	W5W	W3W		P21/5W	R5W	P21W	P21W	C5W
DISCOVERY III (TTA) 10/04 → 09/09	H7	H7	H11		P21W / P21W	W5W	W5W		P21/5W	P21/5W	P21W	P21W	W5W
DISCOVERY III (TTA) 10/04 → 09/09 XENON	D2S	H7	H11		P21W / P21W	W5W	W5W		P21/5W	P21/5W	P21W	P21W	W5W
DISCOVERY IV (LA) 09/09 →	H7	H7	H11		LED / LED	WY5W	W5W		LED	LED	P21W	P21W	W5W
DISCOVERY IV (LA) 09/09 → BI-XENON	D3S	D3S	H11		LED / LED	WY5W	LED		LED	LED	P21W	P21W	W5W
DISCOVERY SPORT (LC) 12/14 →	H7	H15	LED	H15	LED / PY21W	WY5W	W5W		LED	LED	LED	LED	LED
DISCOVERY SPORT (LC) 12/14 → BI-XENON	D3S	D3S	LED	LED	LED / PY21W	WY5W	LED		LED	LED	LED	LED	LED
FREELANDER (LN) 02/98 → SINGLE REFLECOTR	H4	H4	H11		P21W / PY21W	W5W	W5W		P21/5W	P21/5W	P21W	P21W	W5W
FREELANDER (LN) 02/98 → DUAL REFLECTOR	H7	H7	H11		P21W / PY21W	W5W	W5W		P21/5W	P21/5W	P21W	P21W	W5W
FREELANDER 2 (FA_) 10/06 → 2012	H7 / H11	H7	H11		P21W / PY21W	W5W	W5W	W16W	P21/5W	P21/5W	P21W	P21W	W5W
FREELANDER 2 (FA_) 10/06 → 2012 AFS / XENON	D1S	H7	H11		P21W / PY21W	W5W	W5W	W16W	P21/5W	P21/5W	P21W	P21W	W5W
FREELANDER 2 (FA_) 2013 → 10/14	HB3	HB3	H8	LED	P21W / W16W	W5W	LED	W16W	LED	LED	W21W	W16W	W5W
FREELANDER 2 (FA_) 2013 → 10/14 AFS / XENON	D3S	D3S	H8	LED	P21W / W16W	W5W	LED	W16W	LED	LED	W21W	W16W	W5W
RANGE ROVER I (AE, AN, HAA, HAE, HAM, HBM, RE, RN) 07/10 → 07/94	H4	H4			P21W / P21W	W5W	T4W		P21/5W	P21/5W	P21W	P21W	T4W
RANGE ROVER II (LP) 07/94 → 03/02 STOP/TAILLIGHT	H4	H4	H3		P21W / PY21W	W5W	W5W		P21W	R5W	P21W	P21W	W5W
RANGE ROVER II (LP) 07/94 → 03/02 TAILLIGHT	H4	H4	H3		P21W / P21W	W5W	T4W		P21/5W	P21/5W	P21W	P21W	W5W
RANGE ROVER III (LM) 03/02 → 08/12	H7	H7	H7		P21W / P21W	WY5W	W5W		P21W	R5W	P21W	H6W	C5W
RANGE ROVER III (LM) 03/02 → 08/12 XENON	D2S	H7	H7		P21W / P21W	WY5W	W5W		P21W	R5W	P21W	H6W	C5W
RANGE ROVER III (LM) 03/02 → 08/12 BI-XENON	D2S	D2S	H7		P21W / P21W	WY5W	W5W		P21W	R5W	P21W	H6W	C5W
RANGE ROVER IV (LG) 08/12 → BI-XENON	D3S	D3S	H11		LED / LED		LED		LED	LED	LED	LED	
RANGE ROVER EVOQUE (LV) 06/11 →	HB3	HB3	LED	LED	LED / LED	LED			LED	LED		W16W	LED
RANGE ROVER EVOQUE (LV) 06/11 → BI-XENON	D3S	D3S	LED	LED	LED / LED	LED			LED	LED		W16W	LED
RANGE ROVER SPORT (LS) 02/05 →	H7	H7	H11		PY21W / P21W	W5W	W5W		P21/5W	P21/5W	P21W	P21W	W5W
RANGE ROVER SPORT (LS) 02/05 →	D3S	D3S	H11		PY21W / P21W	W5W	W5W		P21/5W	P21/5W	P21W	P21W	W5W
RANGE ROVER SPORT (LW) 04/13 →	HB3	HB3	LED	LED	/ LED		LED		LED	LED		LED	LED
RANGE ROVER SPORT (LW) 04/13 → BI-XENON	D3S	D3S	LED	LED	LED / LED		LED		LED	LED		LED	LED
LEXUS													
CT (ZWA1_) 12/10 →	H11	HB3	H11	LED	WY21W / WY21W	LED	LED		LED	LED	W16W	W16W	W5W
CT (ZWA1_) 12/10 → LED	LED	HB3	H11	LED	WY21W / WY21W	LED	LED		LED	LED	W16W	W16W	W5W
GS (JZS147) 03/93 → 08/97	HB4	HB3	H3		P21W / P21W	W5W	W5W		P21W	R5W	P21W	P21W	W5W
GS (UZS161, JZS160) 08/97 → 03/05	HB4	HB3	HB4		W21W / W21W	W5W	W5W	W5W	W21/5W	W21/5W	W21W	W21W	W5W
GS (UZS161, JZS160) 08/97 → 03/05 XENON	D2R	HB3	HB4		W21W / W21W	W5W	W5W	W5W	W21/5W	W21/5W	W21W	W21W	W5W
GS (GRS19_, UZS19_, GWS19_) 04/05 → 11/11 XENON	D2S	HB3	HB4		PY21W / P21W		W5W		LED	LED	W21W	W21W	W5W
GS (GRL1_, GWL1_) 11/11 → XENON	D4S	D4S	H11	LED	WY21W / W21W		LED		LED	LED	LED	W16W	LED
IS I (JCE1_, GXE1_) 04/99 - 07/05	HB4	HB3	HB4 / H3		PY21W / WY21W	W5W	W5W	W21W	W21/5W	W21/5W	W21W	W16W	W5W
IS SportCross 10/01 - 10/05	HB4	HB3	HB4 / H3		PY21W / PY21W	W5W	W5W		W21/5W	W21/5W	W21W	W16W	W5W
IS II (GSE2_, ALE2_, USE2_) 10/05 → 07/10	H11	HB3	HB4		WY21W / W21W		W5W		LED	LED	W21W	W16W	
IS II (GSE2_, ALE2_, USE2_) 08/10 →	H11	HB3	H11		WY21W / W21W		W5W		LED	LED	W21W	W16W	
IS II (GSE2_, ALE2_, USE2_) 10/05 → 07/10 XENON	D4S	HB3	HB4		WY21W / W21W		W5W		LED	LED	W21W	W16W	
IS II (GSE2_, ALE2_, USE2_) 08/10 → XENON	D4S	HB3	H11		WY21W / W21W		W5W		LED	LED	W21W	W16W	
IS III (GSE3_, AVE3_) 04/13 → BI-XENON	D4S	D4S		LED	WY21W / WY21W		LED		LED	LED	LED	W16W	LED
IS C (SE2_) 04/09 →	H11	HB3	H11		WY21W / WY21W		W5W		LED	LED	W21W	W16W	
IS C (SE2_) 04/09 → XENON	D4S	HB3	H11		WY21W / WY21W		W5W		LED	LED	W21W	W16W	
LFA (LFA10_) 12/10 → 11/12 BI-XENON	D4S	D4S			WY21W / W21W		LED		LED	LED	P21W	P21W	W5W

LS (UCF20) 12/94 → 08/97	H4	HB3	HB4		P21W / P21W	W5W	W5W	W16W	W21/5W	W21/5W	P21W	P21W	W5W
LS (UCF20 09/97 → 10/00 XENON	D2R	HB3	HB4		W21W / W21W	W5W	W5W	W16W	W21/5W	W21/5W	W21W	W21W	W5W
LS (UCF30) 10/00 → 08/06 XENON	D2R	HB3	HB4		PY21W / PY21W	W5W	W5W	W21W	W21/5W	W21/5W	W21W	W21W	W5W
LS (UVF4_, USF4_) 04/06 → 10/09 XENON	D4S	HB3	HB4		WY21W / W16W	W5W	W5W		LED	LED	W21W	W16W	
LS (UVF4_, USF4_) 11/09 → XENON	D4S	HB3	HB4		WY21W / W21W	W5W	W5W		LED	LED	W21W	W16W	
LX (UZJ100) 09/97 → 03/08	H1	HB3	H3		PY21W / -	W5W	W5W		W21/5W	W21/5W	W21W	W21W	W5W
LX (UZJ100) 09/97 → 03/08 XENON	D2S	H1	H3		PY21W / -	W5W	W5W		W21/5W	W21/5W	W21W	W21W	W5W
RX (GLY1_, GGL15, AGL10) 12/08 → 08/13	H11	H9	H11	LED	WY21W / WY21W		W5W		LED	LED	W21W	W16W	LED
RX (GLY1_, GGL15, AGL10) 12/08 → 08/13 XENON	D4S	HB3	H11	LED	WY21W / WY21W		W5W		LED	LED	W21W	W16W	LED
RX (GLY1_, GGL15, AGL10) 09/13 →	H11	H9	H16	LED	WY21W / WY21W		W5W		LED	LED	W21W	W16W	LED
RX (GLY1_, GGL15, AGL10) 09/13 → XENON	D4S	HB3	H16	LED	WY21W / WY21W		W5W		LED	LED	W21W	W16W	LED
SC (UZZ40_) 05/01 → 07/10 XENON	D2S	HB3	H3		PY21W / W21W	W5W	W5W		W21/5W	W21/5W	P21W	W21W	W5W
LOTUS													
ELISE 08/95 → 11/00	H7	H1			P21W / P21W		W5W		P21/4W	P21/4W	P21/4W	P21W	R5W
ELISE 11/00 →	H7	H7	H1		P21W / P21W	W5W	W5W		P21/4W	P21/4W	P21/4W	P21W	R5W
ESPRIT S4 (082) 05/89 → 06/03	H4	H4	H3		P21W / P21W	W5W	W5W		P21/5W	P21/5W	P21W	P21W	R5W
MAZDA													
121 II (DB) 11/90 → 05/97	H4	H4	-		P21W / P21W	W5W	R5W	W16W	P21/5W	P21/5W	P21W	P21W	R5W
121 III (JASM, JBSM) 03/96 → 04/03 DUAL REFLECTOR	H7	H1	H1		P21W / PY21W	W5W	W5W	W5W	P21W	R5W	P21W	P21W	W5W
121 III (JASM, JBSM) 03/96 → 04/03 SINGLE REFLECTOR	H4	H4	H1		P21W / PY21W	W5W	W5W		P21/5W	R5W	P21W	P21W	W5W
2 (DE) 10/07 →	H4	H4	H11		PY21W / PY21W	WY5W	W5W		W21/5W	W21/5W	W21W	W16W	W5W
2 (DL, DJ) 11/14 →	H4	H4	H11	W21/5W	WY21W / WY21W		W21/5W		P21/5W	P21/5W	W21W	W16W	W5W
2 (DL, DJ) 11/14 → LED	LED	LED	H11	LED	WY21W / WY21W		LED		LED	LED	W21W	W16W	W5W
2 (DY) 04/03 → 09/07	H4	H4	H1		P21W / PY21W	W5W	W5W		W21/5W	W21/5W	P21W	P21W	W5W
3 (BK) 10/03 → 06/09	H7	HB3	H11		PY21W / W21W		W5W		W21/5W	W21/5W	W21W	W21W	W5W
3 (BK) 10/03 → 06/09 XENON	D2S	HB3	H11		PY21W / W21W		W5W		W21/5W	W21/5W	W21W	W21W	W5W
3 (BL) 06/09 →	H11	HB3	H11		WY21W / WY21W		W5W	W16W	W21/5W	W21/5W	W21W	W21W	W5W
3 (BL) 06/09 → BI-XENON	D2S	D2S	HB4		WY21W / WY21W		W5W	W16W	W21/5W	W21/5W	W21W	W21W	W5W
3 (BM) 09/13 →	H11	H15/HB3	H11	H15	WY21W / WY21W		W5W		W21/5W	W21/5W	W21W	W21W	W5W
3 (BM) 09/13 → BI-XENON	D4S		H11		WY21W / WY21W				LED	LED	W21W	W21W	W5W
3 Notchback (BK) 06/00 → 06/09	H7	HB3	H11		PY21W / W21W		W5W	W16W	W21/5W	W21/5W	W21W	W21W	W5W
3 Notchback (BK) 06/00 → 06/09 XENON	D2S	HB3	HB4		PY21W / W21W		W5W		W21/5W	W21/5W	W21W	W21W	W5W
3 Notchback (BL) 06/09 →	H11	HB3	H11		WY21W / WY21W		W5W	W21W	W21/5W	W21/5W	W21W	W21W	W5W
3 Notchback (BL) 06/09 → XENON	D2S	D2S	HB4		WY21W / WY21W		W5W	W21W	W21/5W	W21/5W	W21W	W21W	W5W
3 Notchback BM) 09/13 →	H11	H15/HB3	H11	H15	WY21W / WY21W		W5W		W21/5W	W21/5W	W21W	W21W	W5W
3 Notchback (BM) 09/13 → BI-XENON	D4S		H11		WY21W / WY21W				LED	LED	W21W	W21W	W5W
323 C IV (BG) 06/89 → 09/00	H4	H4			P21W / P21W	W5W	W5W		P21/5W	P21/5W	P21W	P21W	R5W
323 C V (BA) 08/94 → 09/98	H4	H4	H1/ H3		P21W / P21W	W5W	W5W	W16W	P21/5W	P21/5W	P21W	P21W	W5W
323 F V (BA) 07/94 → 09/00	H4	H4	H1/ H3		P21W / P21W	W5W	W5W	W16W	P21/5W	P21/5W	P21W	P21W	R5W
323 F VI (BJ) 09/98 → 05/04 SINGLE REFLECTOR	H4	H4	H3		PY21W / PY21W	W5W	W5W	W5W	P21/5W	P21/5W	P21W	P21W	W5W
323 F VI (BJ) 09/98 → 05/04 DUAL REFLECTOR	H7	H1	H3		PY21W / PY21W	W5W	W5W	W5W	P21/5W	P21/5W	P21W	P21W	W5W
323 III Station Wagon (BW) 01/86 → 10/98	H4	H4			P21W / P21W	W5W	R5W	P21W	P21/5W	P21/5W	P21W	P21W	W5W
323 P V (BA) 10/96 → 09/98	H4	H4	H1		PY21W / W21W	W5W	W5W	W16W	W21/5W	W21/5W	W21W	W21W	W5W
323 S V (BA) 05/94 → 09/00	H4	H4	H1		PY21W / P21W	W5W	W5W	W16W	W21/5W	W21/5W	P21W	P21W	W5W
323 S VI (BJ) 05/98 → 05/04	H4	H4	H3		PY21W / P21W	W5W	W5W	P21W	P21/5W	P21/5W	P21W	W21W	W5W
5 (CR19) 02/05 →	H7	HB3	H11		PY21W / PY21W		W5W		W21/5W	W21/5W	P21W		W5W

5 (CR19) 02/05 → XENON	D2S	HB3	H11		PY21W / PY21W		W5W		W21/5W	W21/5W	P21W		W5W
5 (CW) 09/10 →	H11	HB3	H11		PY21W / WY21W		W5W		W21/5W	W21/5W	W21W	W21W	W5W
5 (CW) 09/10 → XENON	D2S	HB3	H11		PY21W / WY21W		W5W		W21/5W	W21/5W	W21W	W21W	W5W
6 (GG) 06/02 → 08/07	H1	H1	H3		PY21W / PY21W	WY5W	W5W		P21/5W	P21/5W	W21W		W5W
6 (GG) 06/02 → 08/07 XENON	D2S	H1	H3		PY21W / PY21W	WY5W	W5W		P21/5W	P21/5W	W21W		W5W
6 (GH) 08/07 →	H1	H1	H11		WY21W / P21W	W5W	W5W		W21/5W	W21/5W	W21W	W16W	W5W
6 (GH) 08/07 → XENON	D2S	H1	H11		WY21W / P21W	W5W	W5W		W21/5W	W21/5W	W21W	W16W	W5W
6 (GJ, GH) 12/12 →	H11	H15	H11	H15	W21W / W21W		W5W		LED	LED	W21W	W21W	W5W
6 (GJ, GH) 12/12 → BI-XENON	D4S		H11	LED	W21W / W21W		LED		LED	LED	W21W	W21W	W5W
6 Estate (GH) 02/08 →	HB4	H9	H11		WY21W / P21W	WY5W	W5W		LED	LED	W21W	W21W	W5W
6 Estate (GH) 02/08 → XENON	D1S	D2S	H11		WY21W / P21W	WY5W	W5W		LED	LED	W21W	W21W	W5W
6 Estate (GJ, GH) 12/12 →	H11	H15	H11	H15	W21W / W21W		W5W		LED	LED	W21W	W21W	W5W
6 Estate (GJ, GH) 12/12 → BI-XENON			H11	LED	W21W / W21W		LED		LED	LED	W21W	W21W	W5W
6 Hatchback (GG) 08/02 → 08/07	H1	H1	H3		PY21W / PY21W	WY5W	W5W		P21/5W	P21/5W	W21W		W5W
6 Hatchback (GG) 08/02 → 08/07 XENON	D2S	H1	H3		PY21W / PY21W	WY5W	W5W		P21/5W	P21/5W	W21W		W5W
6 Station Wagon (GY) 08/02 → 08/07	H1	H1	H3		PY21W / PY21W	WY5W	W5W	W21W	P21/5W	P21/5W	W21W		W5W
6 Station Wagon (GY) 08/02 → 08/07	D2S	H1	H3		PY21W / PY21W	WY5W	W5W	W21W	P21/5W	P21/5W	W21W		W5W
626 III Station Wagon (GV) 09/87 → 09/97	H4	H4	-		P21W / P21W	W5W	R5W	W16W	P21/5W	P21/5W	P21W	P21W	W5W
626 IV (GE) 08/91 → 06/97	H1	H1	H3		P21W / P21W	W5W	W5W	W16W	P21/5W	P21/5W	P21W	P21W	W5W
626 IV Hatchback (GE) 08/91 → 04/97	H1	H1	H3		P21W / P21W	W5W	W5W		P21/5W	P21/5W	P21W	P21W	W5W
626 V (GF) 05/97 → 10/02	H7	H1	H1		PY21W / PY21W	W5W	W5W	P21W	P21/5W	P21/5W	W21W	W21W	W5W
626 V Hatchback (GF) 05/97 → 10/02	H7	H1	H1		PY21W / PY21W	W5W	W5W	P21W	P21/5W	P21/5W	W21W	W21W	W5W
626 V Station Wagon (GW) 01/98 → 10/02	H7	H1	H1		PY21W / PY21W	W5W	W5W	P21W	P21/5W	P21/5W	W21W	W21W	W5W
B-SERIES (UF) 01/85 → 06/99	H4	H4			PY21W / P21W	W5W	T4W		P21/5W	P21/5W	P21W	P21W	T4W
B-SERIES (UN) 02/99 → 07/06	H4	H4			PY21W / P21W	W5W	W5W	P21W	P21/5W	P21/5W	P21W	P21W	W5W
BT-50 (CD) 12/06 →	H4	H4			PY21W / P21W		W5W		P21W	W5W	P21W	P21W	W5W
CX-5 (KE) 11/11 →	H11	HB3 / H15	H11	H15	PY21W / WY21W		W5W		W21/5W	W21/5W	W21W	W16W	W5W
CX-5 (KE) 11/11 → XENON	D4S	HB3 / H15	H11	H15	PY21W / WY21W		W5W		W21/5W	W21/5W	W21W	W16W	W5W
CX-7 (ER) 11/06 →	H7	HB3	H11		PY21W / WY21W	WY5W	W5W		W21/5W	W21/5W	W21W	W21W	W5W
CX-7 (ER) 11/06 → XENON	D2S	HB3	H11		PY21W / WY21W	WY5W	W5W		W21/5W	W21/5W	W21W	W21W	W5W
CX-9 (TB) 01/07 →	H11	HB3	HB4		PY21W / W21W		W5W		LED	LED	W21W	W21W	W5W
CX-9 (TB) 01/07 → XENON	D2S	HB3	HB4		PY21W / W21W				LED	LED	W21W	W21W	W5W
DEMIO (DW) 10/96 → 12/99	H4	H4	H1		PY21W / PY21W	W5W	W5W	W5W	P21/5W	P21/5W	P21W	P21W	W5W
DEMIO (DW) 01/00 → 12/02	H4	H4	H3		PY21W / PY21W	W5W	W5W	W5W	W21/5W	W21/5W	W21W	W21W	W5W
E-SERIES Box (SR2) 01/84 → 07/04	H4	H4			P21W / P21W	W5W	W5W		P21/5W	P21/5W	P21W	P21W	R5W
MPV I (LV) 03/95 → 09/99	H4	H4			P21W / P21W	W5W	W5W	W5W	P21/5W	P21/5W	P21W	P21W	R5W
MPV II (LW) 08/99 → 02/06	H4	H4	HB3		PY21W / PY21W	W5W	W5W	W5W	P21/5W	P21/5W	P21W	P21W	W5W
MX-3 (EC) 07/91 → 10/97	H4	H4	H3		P21W / P21W	W5W	W5W	W16W	P21/5W	P21/5W	P21W	P21W	W5W
MX-5 I (NA) 09/89 → 04/98	H4	H4	H3		P21W / P21W	W5W	W5W	W16W	P21/5W	P21/5W	P21W	P21W	W5W
MX-5 II (NB) 01/98 → 10/05	HB4	HB3	H1 / H11		PY21W / WY21W	W5W	W5W	P21W	W21/5W	W21/5W	W21W	W21W	W5W
MX-5 III (NC) 03/05 →	H7	H7	HB4		PY21W / PY21W	W5W	W5W		P21/5W	P21/5W	P21W	P21W	W5W
MX-5 III (NC) 03/05 → XENON	D2S	H7	HB4		PY21W / PY21W	W5W	W5W		P21/5W	P21/5W	P21W	P21W	W5W
MX-6 (GE) 07/91 → 02/97	H1	H1	H1		P21W / PY21W	W5W	W5W		P21/5W	P21/5W	P21W	P21W	W5W
PREMACY (CP) 07/99 → 03/05	H4	H4	H3		PY21W / W21W	W5W	W5W	W5W	P21/5W	P21/5W	W21W	W21W	W5W
RX 7 III (FD) 07/92 → 08/02	H4	H4			P21W / P21W	W5W	W5W		P21/5W	P21/5W	W21W	W21W	W5W
RX 8 (SE17) 10/03 → 06/12	H7	H9	HB4		WY21W / WY21W	WY5W	W5W	W21W	W21/5W	W21/5W	W21W	W21W	W5W

RX 8 (SE17) 10/03 → 06/12 XENON	D2S	H9	HB4		WY21W / WY21W	WY5W	W5W	W21W	W21/5W	W21/5W	W21W	W21W	W5W
TRIBUTE (EP) 03/00 - 05/08	H4	H4	H1		PY21W / P21W	W5W	W5W	W5W	P21/5W	P21/5W	P21W	P21W	W5W
XEDOS 6 (CA) 01/92 - 10/99	H1	H3	H3		P21W / P21W	W5W	W5W	W16W	P21/5W	P21/5W	P21W	P21W	W5W
XEDOS 9 (TA) 07/93 - 09/02 I	H4	H1	H3		PY21W / P21W	W5W	R5W	P21W	P21/5W	P21/5W	P21W	P21W	T4W
XEDOS 9 (TA) 07/93 - 09/02 II	HB4	HB3	H3		PY21W / P21W	W5W	W5W	P21W	P21/5W	P21/5W	P21W	P21W	W5W
MERCEDES-BENZ													
100 (631) 02/88 → 02/96 UP TO IDENT 099540	H4	H4	H3		P21W / P21W	W5W	T4W		P21W	R5W	P21W	P21W	C5W
100 (631) 02/88 → 02/96 FROM IDENT 099541	H4	H4	H3		P21W / P21W	W5W	W5W		P21W	R5W	P21W	P21W	C5W
100 (631) Platform 02/88 → 02/96 I	H4	H4	H3		P21W / P21W		T4W		P21W	R10W	P21W	P21W	R10W
100 (631) Platform 02/88 → 02/96 II	H4	H4	H3		P21W / P21W		W5W		P21W	R10W	P21W	P21W	R10W
A-CLASS (W168) 07/97 → 08/04	H7	H7	H3		P21W / PY21W	W5W / WY5W	W5W		P21W	P21/4W	P21/4W	P21W	C5W
A-CLASS (W169) 09/04 → 06/12	H7	H7	H11		P21W / PY21W	LED	W5W		P21W	P21/4W	P21/4W	P21W	C5W
A-CLASS (W169) 09/04 → 06/12 XENON	D2S	H7	H11		P21W / PY21W	LED	W5W		P21W	P21/4W	P21/4W	P21W	C5W
A-CLASS (W176) 06/12 →	H7	H15	H11	H15	PY21W / PY21W		LED		W16W	W16W	W16W	W16W	LED
A-CLASS (W176) 06/12 → BI-XENON	D3S	D3S	H11	LED	LED / LED		LED		LED	LED	LED	LED	LED
B-CLASS (W245) 03/05 → 11/11	H7	H7	H11		PY21W / PY21W	LED	W5W		P21/5W	P21/5W	P21W	P21W	C5W
B-CLASS (W245) 03/05 → 11/11 BI-XENON	D2S	D2S	H11		PY21W / PY21W	LED	W5W		P21/5W	P21/5W	P21W	P21W	C5W
B-CLASS (W246) 11/11 →	H7	H7	LED		PY21W / PY21W	LED	W5W		P21W	P21W	LED	LED	C5W
B-CLASS (W246) 11/11 → BI-XENON	D1S	D1S	LED	LED	PY21W / PY21W	LED	W5W		P21W	P21W	LED	LED	C5W
C-CLASS (W202) 03/93 → 05/00 SINGLE REFLECTOR	H4	H4	H1/ H3		P21W / PY21W	W5W / WY5W	W5W		P21W	R5W	P21/4W	P21W	C5W
C-CLASS (W202) 03/93 → 05/00 DUAL REFLECTOR	H7	H7	H1/ H3		P21W / PY21W	W5W / WY5W	W5W		P21W	R5W	P21/4W	P21W	C5W
C-CLASS (W202) 03/93 → XENON	D2S	H7	H1/ H3		P21W / PY21W	W5W / WY5W	W5W		P21W	R5W	P21/4W	P21W	C5W
C-CLASS Estate (S202) 06/96 → 03/01	H7	H7	H1		PY21W / PY21W	WY5W	W5W	P21W	P21W	R5W	P21/4W	P21W	C5W
C-CLASS Estate (S202) 06/96 → 03/01 XENON	D2S	H7	H1		PY21W / PY21W	WY5W	W5W		P21W	R5W	P21/4W	P21W	C5W
C-CLASS T-Model (S203) 03/01 → 08/07	H7	H7	H7/ HB4		PY21W / PY21W	LED	W5W		P21W	P21/4W	P21/4W	P21W	C5W
C-CLASS T-Model (S203) 03/01 → 08/07 XENON	D2S / D2R	D2S / D2R	H7/ HB4		PY21W / PY21W	LED	W5W		P21W	P21/4W	P21/4W	P21W	C5W
C-CLASS (W203) 05/00 → 02/07	H7	H7	H7/ HB4		PY21W / PY21W	LED	W5W		P21W	R5W	P21/4W	P21W	C5W
C-CLASS (W203) 05/00 → 02/07 XENON	D2S / D2R	D2S / D2R	H7/ HB4		PY21W / PY21W	LED	W5W		P21W	R5W	P21/4W	P21W	C5W
C-CLASS (W204) 01/07 →	H7	H7	H7/ H11		PY21W	LED	W5W		P21W	P21W	P21W	P21W	W5W
C-CLASS (W204) 01/07 → BI-XENON	D1S	D1S	H7/ H11		PY21W	LED	W5W		P21W	P21W	P21W	P21W	W5W
C-CLASS (W205) 12/13 →	H7	H7			LED	LED	LED		LED	LED	LED	W16W	LED
C-CLASS (S204) T-Model 08/07 →	H7	H7	H7/ H11		PY21W	LED	W5W		P21W	P21W	P21W	W16W	W5W
C-CLASS (S204) T-Model 08/07 → BI-XENON	D1S	D1S	H7/ H11		PY21W	LED	W5W		P21W	P21W	P21W	W16W	W5W
C-CLASS (S205) T-Model 09/14 →	H7	H7			LED	LED	LED		LED	LED	LED	W16W	LED
C-CLASS Coupe (CL203) 03/01 → 06/11 STOP/TAILLIGHT	H7	H7	H7/ HB4		PY21W	LED	W5W		P21W	R5W	H21W	P21W	C5W
C-CLASS Coupe (CL203) 03/01 → 06/11 TAILLIGHT	H7	H7	H7/ HB4		PY21W	LED	W5W		P21/5W	P21/5W	P21/4W	P21/4W	C5W
C-CLASS Coupe (CL203) 03/01 → 06/11 XENON	D1S / D2S	D1S / D2S	H7/ HB4		PY21W	LED	W5W		P21/5W	P21/5W	P21/4W	P21/4W	C5W
C-CLASS Coupe (C204) 06/11 →	H7	H7	H11		LED	LED	W5W		LED	LED	LED	P21W	LED
C-CLASS Coupe (C204) 06/11 → BI-XENON	D1S	D1S	H11		LED	LED	W5W		LED	LED	LED	P21W	LED
CITAN (415) 11/12 →	H4	H4			PY21W / PY21W	WY5W	W5W	W16W	P21/5W	P21/5W	P21W	P21W	W5W
CLA Coupe (C117) 01/13 →	H7	H15	H11	H15	P21W / P21W				P21W	P21W	P21W	W16W	LED
CLA Shooting Brake (X117) 01/15 →	H7	H15	H11	H15	P21W / P21W				P21W	P21W	P21W	W16W	LED
CLC-CLASS (CL203) 05/08 → 06/11	H7	H7	H11		PY21W / PY21W	LED	W5W		P21/5W	P21/5W	P21W	P21W	C5W
CLC-CLASS (CL203) 05/08 → 06/11 BI-XENON	D2S	D2S	H11		PY21W / LED	LED	W5W		P21/5W	P21/5W	P21W	P21W	C5W
CLK (C208) 06/97 → 07/02	H7	H7	H1		PY21W / PY21W	WY5W	H6W		P21W	R5W	P21/4W	P21W	C5W
CLK (C208) 06/97 → 07/02 XENON	D2S	H7	H1		PY21W / PY21W	WY5W	H6W		P21W	R5W	P21/4W	P21W	C5W

CLK (C209) 06/02 → 05/09	H7	H7	HB4		P21W / PY21W	LED	W5W		P21W	R5W	P21/4W	P21W	C5W
CLK (C209) 06/02 → 05/09 XENON	D1S	H7	HB4		P21W / PY21W	LED	W5W		P21W	R5W	P21/4W	P21W	C5W
CLK (C209) 06/02 → 05/09 BI-XENON	D2S	D2S	HB4		P21W / PY21W	LED	W5W		P21W	R5W	P21/4W	P21W	C5W
CLK Convertible (A208) 03/98 → 03/02	H7	H7	H1		PY21W / PY21W	LED	H6W		P21W	R5W	P21/4W	P21W	C5W
CLK Convertible (A208) 03/98 → 03/02 XENON	D2R	H7	H1		PY21W / PY21W	LED	H6W		P21W	R5W	P21/4W	P21W	C5W
CLK Convertible (A209) 02/03 → 03/10	H7	H7	H11 / HB4		P21W / PY21W	LED	W5W		P21W	R5W	P21/4W	P21W	C5W
CLK Convertible (A209) 02/03 → 03/10 XENON	D1S	H7	H11 / HB4		P21W / PY21W	LED	W5W		P21W	R5W	P21/4W	P21W	C5W
CLK Convertible (A209) 02/03 → 03/10 BI-XENON	D2S	D2S	H11 / HB4		P21W / PY21W	LED	W5W		P21W	R5W	P21/4W	P21W	C5W
CLS (C219) 10/04 → 12/10	H7	H7	H3 / H11		PY21W / LED	LED	W5W		LED	LED	LED	LED	C5W
CLS (C219) 10/04 → 12/10 XENON	D2S	H7	H3 / H11		PY21W / LED	LED	W5W		LED	LED	LED	LED	C5W
CLS (C219) 10/04 → 12/10 BI-XENON	D2S	D2S	H3 / H11		PY21W / LED	LED	W5W		LED	LED	LED	LED	C5W
CLS (C218) 01/11 → BI-XENON	D1S	D1S	LED		LED	LED			LED	LED	LED	W16W	LED
CLS Shooting Brake (X218) 10/12 → BI-XENON	D1S	LED	LED		LED	LED			LED	LED	LED	W16W	LED
E-CLASS (E210) 06/95 → 03/02	H7	H7	H1		P21W / PY21W	WY5W	H6W		P21W	P21/4W	P21/4W	P21W	C5W
E-CLASS (E210) 06/95 → 03/02 Xenon	D2R	H7	H1		P21W / PY21W	WY5W	H6W		P21W	P21/4W	P21/4W	P21W	C5W
E-CLASS (S210) Estate 06/96 → 03/03	H7	H7	H1		P21W / PY21W	WY5W	H6W		P21W	R5W	P21/4W	P21W	C5W
E-CLASS (S210) Estate 06/96 → 03/03 XENON	D2R	H7	H1		P21W / PY21W	WY5W	H6W		P21W	R5W	P21/4W	P21W	C5W
E-CLASS (W124) 06/93 → 06/95	H4	H4	H3		P21W / PY21W		T4W		P21W	R10W	P21W	P21W	C5W
E-CLASS (W210) 06/95 → 03/02	H7	H7	H1		P21W / PY21W	WY5W	H6W	P21W	P21W	R5W	P21/4W	P21W	C5W
E-CLASS (W210) 06/95 → 03/02 XENON	D2R	H7	H1		P21W / PY21W	WY5W	H6W		P21W	R5W	P21/4W	P21W	C5W
E-CLASS (W211) 03/02 → 12/08	H7	H7	H11		PY21W / LED	LED	W5W		LED	LED	LED	LED	C5W
E-CLASS (W211) 03/02 → 12/08 XENON	D1S / D2S	D1S / D2S	H11		PY21W / LED	LED	W5W		LED	LED	LED	LED	C5W
E-CLASS (S211) T-Model 03/03 - 07/09	H7	H7	H11		PY21W / LED	LED	W5W		LED	LED	LED	LED	C5W
E-CLASS (S211) T-Model 03/03 - 07/09 XENON	D2S	H7	H11		PY21W / LED	LED	W5W		LED	LED	LED	LED	C5W
E-CLASS (W212) 01/09 → 02/13	H7	H7	LED		PY21W / LED	LED	W5W		LED	LED	LED	W16W	W5W
E-CLASS (W212) 03/13 →	LED	H7	H11		/ LED	LED	LED		LED	LED	LED	W16W	W5W
E-CLASS (W212) 01/09 → 02/13 BI-XENON	D1S	D1S	LED		PY21W / LED	LED	W5W		LED	LED	LED	W16W	W5W
E-CLASS (S212) T-Model 08/09 → 02/13	H7	H7	H11		PY21W / LED	LED	W5W		LED	LED	LED	W16W	W5W
E-CLASS (S212) T-Model 03/13 →	LED	H7	H11		/ LED	LED	LED		LED	LED	LED	W16W	W5W
E-CLASS (S212) T-Model 08/09 → 02/13 BI-XENON	D1S	D1S	H11		PY21W / LED	LED	W5W		LED	LED	LED	W16W	W5W
E-CLASS (C124) Coupe 06/93 → 06/97	H4	H4	H3		P21W / PY21W		T4W		P21W	R10W	P21W	P21W	C5W
E-CLASS (C207) Coupe 01/09 → 05/13	H7	H7	H11		PY21W / LED	LED	W5W		LED	LED	LED	W16W	W5W
E-CLASS (A207) Coupe 06/13 →	LED	H7	H11		/ LED	LED	LED		LED	LED	LED	W16W	W5W
E-CLASS (C207) Coupe 01/09 → 05/13 BI-XENON	D1S	D1S	H11	LED	PY21W / LED	LED	W5W		LED	LED	LED	W16W	W5W
E-CLASS (A124) Convertible 05/93 → 03/98	H4	H4	H3		P21W / PY21W		T4W		P21W	R10W	P21W	P21W	C5W
E-CLASS (S124) Estate 06/93 → 06/96	H4	H4	H3		P21W / PY21W		T4W		P21W	R10W	P21W	P21W	C5W
E-CLASS (A207) Convertible 01/10 → 05/13	H7	H7	H11		PY21W / LED	LED	LED		LED	LED	LED	W16W	W5W
E-CLASS (A207) Convertible 06/13 →	LED	H7	H11		/ LED	LED	LED		LED	LED	LED	W16W	W5W
E-CLASS (A207) Convertible 01/10 → 05/13 BI-XENON	D1S	D1S	H11	LED	PY21W / LED	LED	LED		LED	LED	LED	W16W	W5W
G-CLASS (W461) 02/90 →	H4	H4	H3		P21W / PY21W	R5W	T4W		P21/5W	P21/5W	P21W	P21W	C5W
G-CLASS (W463) 09/89 →	H4	H4	H3		P21W / P21W	WY5W	T4W		P21/5W	P21/5W	P21W	P21W	C5W
G-CLASS (W463) 09/89 → CLEAR GLASS INDICATOR	H4	H4	H3		PY21W / PY21W	WY5W	T4W		P21/5W	P21/5W	P21W	P21W	C5W
G-CLASS (W463) 07/06 → BI-XENON	D1S	D1S	H3		PY21W / PY21W	WY5W	W5W		P21W	R5W	P21W	P21W	C5W
G-CLASS (W463) Convertible 09/89 →	H4	H4	H3		P21W / PY21W	WY5W	T4W		P21W	R5W	P21W	P21W	C5W
G-CLASS (W463) Convertible 07/06 → BI-XENON	D1S	D1S	H3		PY21W / PY21W	WY5W	W5W		P21W	R5W	P21W	P21W	C5W
GL-CLASS (X164) 09/06 → 05/09	H7	H7	H11		PY21W / PY21W		W5W		P21W	P21W	P21W	P21W	W5W/ C5W

GL-CLASS (X164) 09/06 → 05/09 BI-XENON	D2S	D2S	H11		PY21W / PY21W		W5W		P21W	P21W	P21W	P21W	W5W/ C5W
GL-CLASS (X164) 06/09 →	H7	H7	H11		PY21W / LED	LED	W5W		LED	LED	H21W	P21W	C5W
GL-CLASS (X164) 06/09 → BI-XENON	D1S	D1S	H11		PY21W / LED	LED			LED	LED	H21W	P21W	C5W
GL-CLASS (X166) 07/12 →	H7	H7		LED	LED	LED	W5W		P21W	LED	H21W	W16W	LED
GL-CLASS (X166) 07/12 → BI-XENON	D1S	D1S		LED	LED	LED	LED		P21W	LED	H21W	W16W	LED
GLA-CLASS (X156) 12/13 →	H7	H15	H11	H15	PY21W / PY21W	LED	LED		W16W	W16W	H21W	W16W	
GLA-CLASS (X156) 12/13 → BI-XENON	D3S	D3S	H11		LED	LED	LED		W16W	W16W	H21W	W16W	
GLK-CLASS (X204) 06/08 → 06/12	H7	H7	H11		PY21W / PY21W		W5W		P21W	P21W	P21W	W16W	W5W
GLK-CLASS (X204) 06/08 → 06/ 12 BI-XENON	D1S	D1S	H11		PY21W / PY21W		W5W		P21W	P21W	P21W	W16W	W5W
GLK-CLASS (X204) 07/12 →	H7	H15	H11	H15	LED	LED	LED		LED	LED	LED	W16W	W5W
GLK-CLASS (X204) 07/12 → BI-XENON	D1S	D1S	H11		LED	LED	LED		LED	LED	LED	W16W	W5W
M-CLASS (W163) 02/98 → 06/05	H7	H1	H3 / H8		PY21W / PY21W	W5W	W5W	P21W	P21W	P21/4W	P21/4W	P21W	C5W
M-CLASS (W163) 02/98 → 06/05 XENON	D2R	H7	H3 / H8		PY21W / PY21W	W5W	W5W		P21W	P21/4W	P21/4W	P21W	C5W
M-CLASS (W163) 02/98 → 06/05 BI-XENON	D2S	D2S	H3 / H8		PY21W / PY21W	W5W	W5W		P21W	P21/4W	P21/4W	P21W	C5W
M-CLASS (W164) 07/05 → 08/08	H7	H7	H11		PY21W / PY21W	WY5W	W5W		P21W	P21W	P21W	P21W	C5W
M-CLASS (W164) 07/05 → 08/08 XENON	D2S	H7	H11		PY21W / PY21W	WY5W	W5W		P21W	P21W	P21W	P21W	C5W
M-CLASS (W164) 09/08 →	H7	H7	H11		PY21W / PY21W	WY5W	W5W		P21W	P21W	P21W	P21W	C5W
M-CLASS (W164) 09/08 → BI-XENON	D1S	D1S	H11		PY21W / LED	WY5W	W5W		LED	LED	W16W	W16W	C5W
M-CLASS (166) 06/11 →	H7	H7		LED	/ LED	LED	W5W		P21W	LED	H21W	W16W	LED
M-CLASS (166) 06/11 → BI-XENON	D1S	D1S		LED	LED / LED	LED	LED		P21W	LED	H21W	W16W	LED
R-CLASS (W251, V251) 01/06 →	H7	H7	H7/ H11		PY21W / PY21W	LED	W5W		LED	W5W	P21W	W16W	C5W
R-CLASS (W251, V251) 01/06 → XENON	D2S	H7	H7/ H11		PY21W / PY21W	LED	W5W		LED	W5W	P21W	W16W	C5W
R-CLASS (W251, V251) 01/06 → BI-XENON	D1S	D1S	H7/ H11		PY21W / PY21W	LED	W5W		LED	W5W	P21W	W16W	C5W
S-CLASS (W140) 01/93 → 10/98 DUAL REFLECTOR	H7	H7	H1		P21W / PY21W	W5W / WY5W	W5W		P21W	R5W	P21W	P21W	C5W
S-CLASS (W140) 01/93 → 10/98 XENON	D2R	H7	H1		P21W / PY21W	W5W / WY5W	W5W		P21W	R5W	P21W	P21W	C5W
S-CLASS (C140) Coupe 09/92 → 02/99	H7	H7	H1		PY21W / PY21W	WY5W	W5W		P21W	R5W	P21W	P21W	C5W
S-CLASS (C140) Coupe 09/92 → 02/99 XENON	D2R	H7	H1		PY21W / PY21W	WY5W	W5W		P21W	R5W	P21W	P21W	C5W
S-CLASS (W220) 10/98 →	H7	H7	H1		PY21W / PY21W		W5W	R5W	P21W	P21/4W	P21/4W	P21W	C5W
S-CLASS (W220) 10/98 → XENON	D2R	H7	H1		PY21W / PY21W		W5W	R5W	P21W	P21/4W	P21/4W	P21W	C5W
S-CLASS (W220) 10/98 → BI-XENON	D2R	D2R	H1		PY21W / PY21W		W5W	R5W	P21W	P21/4W	P21/4W	P21W	C5W
S-CLASS (C215) Coupe 03/99 - 03/06 → XENON	D2R	H7	HB4		PY21W / PY21W		W5W	R5W	P21W	P21/4W	P21/4W	P21W	C5W
S-CLASS (W221) 10/05 →	H7	H7	H7/ H11		LED	LED	W5W		P21W	LED	LED		W5W
S-CLASS (W221) 10/05 → XENON	D1S	H9	H7/ H11		LED	LED	W5W		P21W	LED	LED		W5W
S-CLASS (C216) Coupe 05/06 → XENON	D1S	H7	H7/ H11		W16W / LED	LED	W5W		LED	LED	P21W	W16W	W5W
SL (R129) 03/89 → 12/01	H4	H4	H3		P21W / PY21W	W5W / WY5W	W5W	W3W	P21W	P21/4W	P21/4W	P21W	R5W
SL (R129) 03/89 → 12/01 XENON	D2S	H1	H3		P21W / PY21W	W5W / WY5W	W5W		P21W	P21/4W	P21/4W	P21W	R5W
SL (R230) 10/01 → 01/12	H7	H7	H1		PY21W / PY21W		H6W	R5W	P21W	P21/4	P21/4W	P21W	C5W
SL (R230) 10/01 → 01/12 BI-XENON	D2S	D2S	H1		PY21W / PY21W		H6W	R5W	P21W	P21/4	P21/4W	P21W	C5W
SL (R231) 01/12 →	D1S	D1S		LED	LED	LED	LED		LED	LED	LED	LED	LED
SLK (R170) 04/96 → 04/04	H7	H7	H1		PY21W / PY21W	WY5W	W5W		P21W	R5W	P21W	P21W	C5W
SLK (R170) 04/96 → 04/04 XENON	D2R	H7	H1		PY21W / PY21W	WY5W	W5W		P21W	R5W	P21W	P21W	C5W
SLK (R171) 03/04 → 02/11	H7	H7	HB4		PY21W / PY21W	W5W	LED		LED	LED	P21W	P21W	C5W
SLK (R171) 03/04 → 02/11 BI-XENON	D2S	D2S	HB4		PY21W / PY21W	W5W	LED		LED	LED	P21W	P21W	C5W
SLK (R172) 02/11 →	H7	H7	LED		PY21W / LED	LED	W5W		LED	LED	LED	W16W	LED
SLK (R172) 02/11 → BI-XENON	D1S	D1S	LED	LED	PY21W / LED	LED	W5W		LED	LED	LED	W16W	LED
SLR (R199) 04/04 → 09/06 XENON	D2S	HB3	H3		PY21W / LED	LED	W5W		LED	LED	P21W	P21W	LED

SLR (R199) ROADSTER 10/06 → XENON	D2S	HB3	H3		PY21W / LED	LED	W5W		LED	LED	P21W	P21W	LED
SLS AMG (C197) 03/10 → XENON	D1S	D1S	LED		LED	LED			LED	LED	LED	LED	LED
SLS AMG (A197) Convertible 06/11 →	D1S	D1S	LED		LED	LED			LED	LED	LED	LED	LED
SPRINTER (901/902/903/904) 02/95 → 03/00	H1	H1	H1		PY21W / PY21W	P21W	W5W		P21/5W	P21/5W	P21W	P21W	W5W
SPRINTER (901/902/903/904) 04/00 → 08/02	H7	H1	H1		PY21W / PY21W	P21W	W5W		P21W	R5W	P21W	P21W	R5W
SPRINTER (901/902/903/904) 08/02 → 05/06	H7	H3	H1		PY21W / PY21W	P21W	W5W		P21W	R5W	P21W	P21W	R5W
SPRINTER (906) 06/06 → 08/13	H7	H7	H7		PY21W / PY21W		W5W		P21W	R5W	P21W	P21W	R5W
SPRINTER (906) 06/06 → 08/13 XENON	D1S	D1S	H11		PY21W / PY21W		W5W		P21W	R5W	P21W	P21W	R5W
SPRINTER (906) 09/13 →	H7	H7	HB4	W21W	PY21W / PY21W		W5W		P21W	R5W	P21W	P21W	R5W
SPRINTER (906) 09/13 → XENON	D1S	D1S	HB4	W21W	PY21W / PY21W		W5W		P21W	R5W	P21W	P21W	R5W
T1 (601/602) Bus 04/77 → 02/96	H4	H4			P21W / P21W		T4W		P21W	R5W	P21W	P21W	C5W
V-CLASS (638/2) 02/96 → 07/03	H4	H4	H1		PY21W / PY21W	WY5W	W5W		P21/5W	P21/5W	P21W	P21W	C5W
V-CLASS (W447) 03/14 →	H7	H15		H15	PY21W / P21W				P21W	P21W	P21W	P21W	LED
VANEO (414) 02/02 → 07/05	H7	H1	H1		PY21W / PY21W	WY5W	W5W	W2,3W	P21W	R5W	P21/5W	P21W	C5W
VARIO Bus, Box 09/96 →	H1	H1	H1		P21W / P21W		W5W		P21W	R5W	R10W	P21W	C5W
VIANO (W639) 09/03 →	H7	H7	H7		PY21W / PY21W		W5W		P21/5W	P21/5W	P21W	P21W	C5W
VIANO (W639) 09/03 → BI-XENON	D1S	D1S	H7		PY21W / PY21W		W5W		P21/5W	P21/5W	P21W	P21W	C5W
VITO / MIXTO Box (W639) 09/03 →	H7	H7	H7		P21W / P21W	WY5W	W5W		P21/5W	P21/5W	P21W	P21W	C5W
VITO / MIXTO Box (W639) 09/03 → XENON	D1S	H7	H7		P21W / P21W	WY5W	W5W		P21/5W	P21/5W	P21W	P21W	C5W
VITO (638) Bus, Van 02/96 → 09/03	H1	H4	H4		P21W / P21W	W5W	W5W		P21/5W	P21/5W	P21W	P21W	C5W
VITO (W639) Bus, Box, Van 09/03 →	H7	H7	H7		PY21W / PY21W	WY5W	W5W		P21/5W	P21/5W	P21W	P21W	C5W
VITO (W639) Bus, Box, Van 09/03 → XENON	D1S	H7	H7		PY21W / PY21W	WY5W	W5W		P21/5W	P21/5W	P21W	P21W	C5W
VITO / MIXTO (W447) 10/14 →	H7	H15	H11	H15	PY21W / P21W		LED		P21W	P21W	P21W	P21W	LED
MG													
MG TF 03/02 →	H7	HB3	H11		PY21W / PY21W	WY5W	W5W		P21W	R5W	P21W	P21W	C5W
MG ZR 06/01 → 04/05	H7	H1	H1		PY21W / PY21W	WY5W	W5W	W3W	P21W	R10W	P21W	P21W	C5W
MG ZS 07/01 → 04/05	H7	H1	H1		PY21W / PY21W	WY5W	W5W		P21W	R10W	P21W	P21W	W5W
MG ZS Hatchback 07/01 → 04/05	H7	H1	H1		PY21W / PY21W	WY5W	W5W		P21W	R10W	P21W	P21W	C5W
MG ZT / ZT-T 06/01 → 07/05	H7	H1	H1		PY21W / PY21W		W5W		P21W	W5W	P21W	P21W	C5W
MG ZT / ZT-T 06/01 → 07/05 XENON	D2S	H1	H1		PY21W / PY21W		W5W		P21W	W5W	P21W	P21W	C5W
MGF (RD) 03/95 → 03/02	H1	H1	H3		P21W / PY21W	W5W	W5W		P21W	R5W	P21W	P21W	C5W
MINI													
MINI (R50, R53) 06/01 → 09/06	H7	H7	H11		P21W / PY21W	WY5W	W5W		P21/5W	P21/5W	P21W	P21W	C5W
MINI (R50, R53) 06/01 → 09/06 XENON	D2R	H9	H11		P21W / PY21W	WY5W	W5W		P21/5W	P21/5W	P21W	P21W	C5W
MINI (R56) 09/06 →	H4	H4	H8		PY21W / PY21W	WY5W	W5W		P21W	P21W	W16W	P21W	LED
MINI (R56) 09/06 → BI-XENON	D1S	D1S	H8		PY21W / PY21W	WY5W	W5W		P21W	P21W	W16W	P21W	LED
MINI (F55, F56) 12/13 →	H4	H4	H8		LED / P21W	WY5W	W5W		P21W	LED	W16W	P21W	LED
MINI (F55, F56) 12/13 → LED	LED	LED	H8		LED / P21W	WY5W	LED		P21W	LED	W16W	P21W	LED
MINI (R52) Convertible 07/04 → 11/07	H7	H7	H11		P21W / PY21W	W5W / WY5W	W5W		P21/5W	P21/5W	P21W	P21W	LED
MINI (R52) Convertible 07/04 → 11/07 XENON	D2R	H9	H11		P21W / PY21W	W5W / WY5W	W5W		P21/5W	P21/5W	P21W	P21W	LED
MINI (R57) Convertible 11/07 →	H13	H13	H8		P21W / PY21W	W5W	W5W		P21/5W	P21/5W	P21W	P21W	LED
MINI (R57) Convertible 11/07 → BI-XENON	D1S	D1S	H8		P21W / PY21W	W5W	W5W		P21/5W	P21/5W	P21W	P21W	LED
MINI (R58) Coupe 09/11 →	H4	H4	H8		PY21W / PY21W	WY5W	W5W	W21W	P21/5W	P21/5W	W16W	W16W	C5W
MINI (R58) Coupe 09/11 → BI-XENON	D1S	D1S	H8		PY21W / PY21W	WY5W	W5W	W21W	P21/5W	P21/5W	W16W	W16W	C5W
MINI CLUBMAN (R55) 10/07 →	H4	H4	H8		PY21W / PY21W	WY5W	W5W		P21W	P21W	P21W	P21W	W5W
MINI CLUBMAN (R55) 10/07 → BI-XENON	D1S	D1S	H8		PY21W / PY21W	WY5W	W5W		P21W	P21W	P21W	P21W	W5W

MINI CLUBVAN (R55) 12/12 →	H4	H4	H8		PY21W / PY21W	WY5W	W5W		P21W	P21W	P21W	P21W	W5W
MINI CLUBVAN (R55) 12/12 → BI-XENON	D1S	D1S	H8		PY21W / PY21W	WY5W	W5W		P21W	P21W	P21W	P21W	W5W
MINI COUNTRYMAN (R60) 06/10 →	H4	H4	H8		PY21W / PY21W	W5W	W5W		P21W	P21W	P21W	P21W	W5W
MINI COUNTRYMAN (R60) 06/10 → BI-XENON	D1S	D1S	H8		PY21W / PY21W	W5W	W5W		P21W	P21W	P21W	P21W	W5W
MINI MK1 01/91 → 12/00	H4	H4	H3		P21W / P21W		T4W		P21/5W	P21/5W	P21W	P21W	C5W
MINI PACEMAN (R61) 04/12 → I	H4	H4	H8		P21W / P21W	WY5W	W5W		P21W	P21W	P21W	P21W	W5W
MINI PACEMAN (R61) 04/12 → II	H4	H4	H8		PY21W / P21W	WY5W	W5W		P21W	P21W	P21W	P21W	W5W
MINI PACEMAN (R61) 04/12 → BI-XENON I	D1S	D1S	H8		P21W / P21W	WY5W	W5W		P21W	P21W	P21W	P21W	W5W
MINI PACEMAN (R61) 04/12 → BI-XENON II	D1S	D1S	H8		PY21W / P21W	WY5W	W5W		P21W	P21W	P21W	P21W	W5W
MINI ROADSTER (R59) 02/12 →	H4	H4	H8		PY21W / PY21W	WY5W	W5W		P21W	P21W	W16W	W16W	C5W
MINI ROADSTER (R59) 02/12 → BI-XENON	D1S	D1S	H8		PY21W / PY21W	WY5W	W5W		P21W	P21W	W16W	W16W	C5W
MITSUBISHI													
3000 GT (Z16A) 01/95 → 08/99	HB4	HB4	H3		P21W / P21W	W5W	W5W	W5W	P21/5W	P21/5W	P21W	P21W	W5W
ASX (GA_W_) 02/10 →	H11	HB3	H11 / H8		WY21W / W21W	LED	W5W		LED	LED	W21W	W16W	W5W
ASX (GA_W_) 02/10 → XENON	D2S	HB3	H11 / H8		WY21W / W21W	LED	W5W		LED	LED	W21W	W16W	W5W
CANTER (FB_, FE_, FG_) 01/05 → 11/10	H4	H4	H7		PY21W / P21W		W5W		P21W	R10W	P21W	P21W	C5W
CARISMA (DA_) 07/95 → 06/06	H4	H4	H3		PY21W / PY21W	WY5W	T4W	W5W	P21/5W	P21/5W	P21W	P21W	W5W
CARISMA Hatchback (DA_) 09/96 → 06/06	H4	H4	H3		PY21W / PY21W	WY5W	T4W	W5W	P21/5W	P21/5W	P21W	P21W	W5W
COLT IV (CA_A) 03/92 → 04/96	H4	H4	H3		P21W / P21W	W5W	T4W	W16W	P21/5W	P21/5W	P21W	P21W	W5W
COLT V (CJ_, CP_) 09/95 → 09/03	H4	H4	H3		PY21W / P21W	W5W	W5W	R10W	P21/5W	P21/5W	P21W	P21W	W5W
COLT VI (Z3_, Z2_) 10/02 → 06/12	H7	H7	H11		PY21W / P21W	W5W	W5W	W5W	P21W	P21/4W	P21/4W	P21W	W5W
COLT CZC Convertible (RG) 05/06 → 07/09	H7	H7	H11		PY21W / P21W	W5W	W5W	W5W	P21/5W	P21/5W	P21W	P21W	W5W
ECLIPSE II (D3_) 04/94 → 04/99 SINGLE REFLECTOR	H4	H4	H3		P21W / P21W	W5W	T4W		P21/5W	P21/5W	P21W	P21W	W5W
ECLIPSE II (D3_) 04/94 → 04/99 DUAL REFLECTOR	H7	HB3	H3		P21W / P21W	W5W	T4W		P21/5W	P21/5W	P21W	P21W	W5W
GALANT Hatchback (DJ_, ED_, EF_) 10/03 →	H4	H4	H10		PY21W / P21W	WY5W	W5W	W16W	P21/5W	P21/5W	W21W	W16W	W5W
GALANT V (E5_A, E7_A, E8_A) 11/92 → 10/96	H4	H4	H3		P21W / P21W	W5W	W5W	P27W	P21/5W	P21/5W	P21W	P21W	W5W
GALANT V Hatchback (E5_A, E7_A, E8_A) 11/92 → 08/96	H4	H4	H3		P21W / P21W	W5W	W5W	P27W	P21/5W	P21/5W	P21W	P21W	W5W
GALANT VI (EA_) 09/96 → 10/04	H7	H1	H3		PY21W / PY21W	WY5W	T4W	P21W	W21/5W	W21/5W	W21W	W21W	W5W
GALANT VI Station Wagon (EA_) 09/96 → 10/03	H7	H1	H3		PY21W / PY21W	WY5W	T4W	W5W	W21/5W	W21/5W	W21W	W21W	W5W
GALLOPER (JK-01) 09/98 → 12/03	H4	H4			P21W / P21W	W5W	W5W		P21/5W	P21/5W	P21W	P21W	T4W
GRANDIS (NA_W) 03/03 →	H1	H9	HB4		W21W / PY21W		W5W		LED	LED	W21W	W21W	W5W
i (_HA_) 01/06 →	H11	HB3	H8		WY21W / W21W	WY5W	W5W	W5W	LED	LED	W21W	W21W	W5W
L 200 (K__T, K3_T, K2_T, K1_T, K0_T) 10/86 → 10/96 AMBER GLASS	H4	H4			P21W / P21W	T4W	W5W		P21/5W	P21/5W	P21W	P21W	R5W
L 200 (K__T, K3_T, K2_T, K1_T, K0_T) 10/86 → 10/96 CLEAR GLASS	H4	H4			PY21W / PY21W	T4W	W5W		P21/5W	P21/5W	P21W	P21W	W5W
L 200 (K__T, K7_T, K6_T) 06/96 → 03/03	H4	H4			P21W / PY21W	W5W / WY5W	W5W	W5W	P21/5W	P21/5W	P21W	P21W	W5W
L 200 (KB_T, KA_T) 11/05 →	H4	H4	H11		PY21W / PY21W	WY5W	W5W	W5W	P21/5W	P21/5W	W16W	W16W	W5W
L 300 Box, Bus (P0_W, P1_W, P2_W) 11/90 → 05/04 DUAL REFLECTOR	H1	H3			P21W / P21W		W5W	W5W	P21/5W	P21/5W	P21W	P21W	R10W
L 300 Platform/Carrier (P1_T) 04/94 → 04/00	H4	H4			P21W / P21W		W5W		P21/5W	P21/5W	P21W	P21W	R10W
L 400 / SPACE GEAR Box, Bus (PD_W, PC_W, PA_V, PB_V) 06/94 → 07/97	H4	H4			P21W / P21W	W5W	W5W	W5W	P21/5W	P21/5W	P21W	P21W	R10W
L 400 / SPACE GEAR Box, Bus (PD_W, PC_W, PA_V, PB_V) 08/97 → 06/05	H7	H1			P21W / P21W	W5W	W5W	W5W	P21/5W	P21/5W	P21W	P21W	R10W
LANCER Estate (CS_W) 09/03 → 10/08	H4	H4	H3		W21W / PY21W	WY5W	W5W		W21/5W	W21/5W	W21W	W16W	W5W
LANCER SPORTBACK (CX_A) 06/08 → HALOGEN	HB4	H11	H11		WY21W / WY21W	WY5W	W5W	W5W	W21/5W	W21/5W	W21W	W16W	W5W

LANCER SPORTBACK (CX_A) 06/08 → XENON	D2R	HB3	H11		WY21W / WY21W	WY5W	W5W	W5W	W21/5W	W21/5W	W21W	W16W	W5W
LANCER SPORTBACK (CX_A) 06/08 → BI-XENON	D2S	D2S	H11		WY21W / WY21W	WY5W	W5W	W5W	W21/5W	W21/5W	W21W	W16W	W5W
LANCER Notchback (CS_A, CT0) 03/00 → I GENERATION	H4	H4	H3		P21W / PY21W	W5W	W5W	W5W	P21/5W	W21/5W	P21W	P21W	W5W
LANCER Notchback (CS_A, CT0) 03/00 → II GENERATION	H4	H4	H3		W21W / WY21W	WY5W	W5W	W5W	W21/5W	W21/5W	W21W	W16W	W5W
LANCER Notchback (CY/Z_A) 03/07 → HALOGEN	HB4	H11	H11		W21W / WY21W	WY5W	W5W	W5W	W21/5W	W21/5W	W21W	W21W	W5W
LANCER Notchback (CY/Z_A) 03/07 → XENON	D2R	HB3	H11		W21W / WY21W	WY5W	W5W	W5W	W21/5W	W21/5W	W21W	W21W	W5W
LANCER Notchback (CY/Z_A) 03/07 → BI-XENON	D2S	D2S	H11		W21W / WY21W	WY5W	W5W	W5W	W21/5W	W21/5W	W21W	W21W	W5W
LANCER V (CB/D_A) 06/92 → 07/96	H4	H4	H3		P21W / P21W	W5W	T4W		P21/5W	P21/5W	P21W	P21W	W5W
LANCER V Station Wagon (CB_W, CD_W) 12/92 → 10/03	H4	H4	H3		P21W / P21W	W5W	T4W	P21W	P21/5W	P21/5W	P21W	P21W	W5W
LANCER VI (CJ-CP) 09/95 → 08/03	H4	H4	H3		PY21W / P21W	W5W	W5W	P21W	P21/5W	P21/5W	P21W	P21W	W5W
MIRAGE/SPACESTAR Hatchback (A0_A, A05A, LA) 05/12 →	H1		H8		PY21W / P21W	WY5W	W5W		P21/5W	P21/5W	P21W	P21W	W5W
OUTLANDER I (CU_) 02/03 → 12/06	HB3	H1	HB4		WY21W / WY21W	WY5W	W5W		W21/5W	W21/5W	W21W	W21W	W5W
OUTLANDER II (CW_W) 11/06 → 11/ 12 HALOGEN	HB4	H11	H11		WY21W / WY21W	W5W	W5W	W5W	LED	LED	W21W	W21W	W5W
OUTLANDER II (CW_W) 11/06 → 11/ 12 XENON	D2R	HB3	H11		WY21W / WY21W	W5W	W5W	W5W	LED	LED	W21W	W21W	W5W
OUTLANDER II (CW_W) 11/06 → 11/ 12 BI-XENON	D2S	D2S	H11		WY21W / WY21W	W5W	W5W	W5W	LED	LED	W21W	W21W	W5W
OUTLANDER III (GG_W, GF_W, ZJ) 08/12 →	H7	HB3	H11 / H8		PY21W / PY21W		W5W		P21/5W	P21/5W	W21W	W21W	W5W
OUTLANDER III (GG_W, GF_W, ZJ) 08/12 → XENON	D4S	HB3	H11 / H8		PY21W / PY21W		W5W		P21/5W	P21/5W	W21W	W21W	W5W
PAJERO CLASSIC (V2_W) 06/02 →	H4	H4	H3		P21W / PY21W	W5W	W5W	W5W	P21/5W	P21/5W	P21W	P21W	R10W
PAJERO II (V3_W, V2_W, V4_W) 12/90 → 10/99	H4	H4	H3		P21W / P21W	W5W	W5W	W5W	P21/5W	P21/5W	P21W	P21W	R10W
PAJERO II Canvas Top (V2_W, V4_W) 12/90 → 04/00	H4	H4	H3		P21W / P21W	W5W	W5W	W5W	P21/5W	P21/5W	P21W	P21W	R10W
PAJERO III (V7_W, V6_W) 04/00 → 09/02	H4	H4	HB4		W21W / P21W	W5W	W5W	W16W	P21/5W	P21/5W	W21W	W21W	W5W
PAJERO III (V7_W, V6_W) 10/02 → 01/07	H4	H4	HB4		W21W / PY21W	W5W	W5W	W16W	W21/5W	W21/5W	W21W	W21W	W5W
PAJERO IV (V80, V90) 11/06 → HALOGEN	H11	H9	H11		PY21W / PY21W	W5W	W5W	W5W	W21/5W	W21/5W	W21W	W21W	W5W
PAJERO IV (V80, V90) 11/06 → XENON	D2S	H9	H11		PY21W / PY21W	W5W	W5W	W5W	W21/5W	W21/5W	W21W	W21W	W5W
PAJERO PININ (H6_W, H7_W) 03/99 → 06/07	H4	H4	H3		PY21W / PY21W	W5W	W5W	W16W	P21/5W	P21/5W	W21W	W21W	W5W
PAJERO SPORT (K90) 11/97 → 08/99	H4	H4	H3		P21W / P21W	W5W	W5W	W16W	P21/5W	P21/5W	P21W	P21W	W5W
PAJERO SPORT (K90) 09/99 →	H4	H4	H3		W21W / P21W	W5W	W5W	W16W	P21/5W	P21/5W	W21W	W21W	W5W
SANTAMO 03/99 → 12/04	H4	H4	H3		P21W / P21W		W5W	W21W	P21/5W	P21/5W	W21W	W16W	T4W
SIGMA (F2_A, F1_A) 12/90 → 07/96	H4	H4	H3		P21W / P21W	W5W	W5W		P21/5W	P21/5W	P21W	P21W	W5W
SIGMA Station Wagon (F0_W) 01/93 → 07/96	H4	H4	H3		P21W / P21W	W5W	W5W	R10W	P21/5W	P21/5W	P21W	P21W	W5W
SPACE GEAR (PD_W, PC_W, PB_V, PA_W, PA_V) 08/97 → 06/05	H7	H1			P21W / P21W	W5W	W5W	W5W	P21/5W	P21/5W	P21W	P21W	R10W
SPACE RUNNER (N1_W, N2_W) 10/91 → 08/99	H4	H4	H3		P21W / P21W	W5W	W5W	W5W	P21/5W	P21/5W	P21W	P21W	T4W
SPACE RUNNER (N6_W) 08/99 → 08/02	H4	H4	HB4		W21W / W21W	W5W	W5W	W5W	W21W	W5W	W21W	W21W	W5W
SPACE STAR (DG_A) 06/98 → 12/04	H4	H4	H7		PY21W / PY21W	WY5W	T4W	W5W	P21/5W	P21/5W	P21W	P21W	W5W
SPACE STAR Hatchback A0_A) 05/12 →	H1	H1	H8		PY21W / P21W		W5W		P21/5W	P21/5W	P21W	P21W	W5W
SPACE WAGON (N3_W, N4_W) 05/91 → 11/98	H4	H4	H3		P21W / P21W	W5W	W5W	W5W	P21/5W	P21/5W	P21W	P21W	T4W
SPACE WAGON (N9_W, N8_W) 10/98 → 12/04	H4	H4	H3		W21W / W21W	W5W	W5W	W5W	W21/5W	W21/5W	W21W	W21W	W5W
NISSAN													
100 NX (B13) 03/90 → 01/96	H4	H4	H3		P21W / P21W	W5W	W5W	W16W	P21/5W	P21/5W	P21W	P21W	R10W
200 SX (S14) 10/93 → 12/99	H4	H4	H3		P21W / P21W		W5W		P21/5W	P21/5W	P21W	P21W	R10W
300 ZX (Z32) 12/89 → 12/97	H3	H1			P21W / P21W	W5W	W5W		P21/5W	P21/5W	P21W	P21W	W5W
350 Z (Z33) 10/02 → XENON	D2R	H7			PY21W / PY21W	WY5W	W5W		P21/5W	P21/5W	P21W	P21W	W5W
350 Z Roadster (Z33) 10/03 → XENON	D2R	H7			PY21W / PY21W		W5W		P21/5W	P21/5W	P21W	P21W	W5W
370 Z (Z34) 04/09 → BI-XENON	D2S	D2S			WY21W / LED	WY5W	W5W		LED	LED	W21W	W16W	W5W

370 Z Roadster (Z34) 01/09 → BI-XENON	D2S	D2S			WY21W / LED	WY5W	W5W		LED	LED	W21W	W16W	W5W
ALMERA I (N15) 07/95 → 07/00	H4	H4	H3		P21W / P21W	W5W	W5W	W5W	P21/5W	P21/5W	P21W	P21W	W5W
ALMERA I Hatchback (N15) 07/95 → 03/00	H4	H4	H3		P21W / P21W	W5W	W5W	P21W	P21/5W	P21/5W	P21W	P21W	W5W
ALMERA II (N16) 06/00 → SINGLE REFLECTOR	H4	H4	H3		PY21W / P21W	W5W / WY5W	W5W	W5W	P21/5W	P21/5W	P21W	P21W	W5W
ALMERA II (N16) 06/00 → 07/02 DUAL REFLECTOR	H7	H1	H3		PY21W / P21W	W5W / WY5W	W5W	W5W	P21/5W	P21/5W	P21W	P21W	W5W
ALMERA II Hatchback (N16) 01/00 → 07/02	H7	H1	H11		PY21W / P21W	W5W / WY5W	W5W	W5W	P21/5W	P21/5W	P21W	P21W	W5W
ALMERA II Hatchback (N16) 08/02 →	H7	H7	H11		PY21W / P21W	W5W / WY5W	W5W	W5W	P21/5W	P21/5W	P21W	P21W	W5W
ALMERA TINO (V10) 08/00 →	H7	H7	HB4		PY21W / W21W	W5W	W5W		P21/5W	P21/5W	P21W	P21W	W5W
CUBE (Z12) 03/10 →	H4	H4	H8		PY21W / PY21W	WY5W	W5W	W16W	W21/5W	W21/5W	W21W	W16W	W5W
GT-R (R35) 12/08 → XENON	D2S	H9			WY21W / WY21W	WY5W	W5W		LED	LED	P21W	W16W	W5W
INTERSTAR Box/Bus (X70) 07/02 → SINGLE REFLECTOR	H4	H4	H1		PY21W / W21W	W5W / WY5W	W5W	P21W	P21/5W	P21/5W	P21W	P21W	C5W
INTERSTAR Box, Bux (X70) 07/02 → DUAL REFLECTOR	H7	H1	H1		PY21W / W21W	W5W / WY5W	W5W	P21W	P21/5W	P21/5W	P21W	P21W	C5W
INTERSTAR Platform/Carrier 08/03 →	H7	H1	H1		PY21W / P21W	WY5W	W5W		P21/5W	P21/5W	P21W	P21W	R10W
JUKE (F15) 06/10 →	H4	H4	H8		PY21W / W21W	WY5W	W5W		P21/5W	P21/5W	W16W	W16W	W5W
KUBISTAR (X76) 08/03 →	H4	H4	H1		PY21W / PY21W	W5W	W5W	P21W	P21/5W	P21/5W	P21W	P21W	W5W
KUBISTAR Box 08/03 →	H4	H4	H1		PY21W / PY21W	W5W	W5W		P21/5W	P21/5W	P21W	P21W	W5W
LEAF 11/10 →	LED	H9	H8		PY21W / WY21W	WY5W	W5W		LED	LED	W21W	W16W	W5W
MAXIMA QX (A32) 03/94 → 08/00	HB4	HB3			PY21W / PY21W	W5W	W5W	W5W	W21/5W	W21/5W	P21W	P21W	W5W
MAXIMA QX (A32) 03/94 → 08/00 XENON	D2R	HB3			PY21W / PY21W	W5W	W5W	W5W	W21/5W	W21/5W	P21W	P21W	W5W
MAXIMA QX (A33) 04/99 → 11/03	HB4	HB3	H3		PY21W / PY21W	W5W	W5W	P21W	W21/5W	W21/5W	P21W	P21W	W5W
MAXIMA QX (A33) 04/99 → 11/03 XENON	D2R	HB3	H3		PY21W / PY21W	W5W	W5W		W21/5W	W21/5W	P21W	P21W	W5W
MICRA II (K11) 01/92 → 02/03	H4	H4	H3 / HB4		P21W / PY21W	W5W	W5W		P21/5W	P21/5W	P21W	P21W	W5W
MICRA III (K12) 01/03 → 05/10	H4	H4	H11		P21W / P21W	W5W	W5W	P21W	P21/5W	P21/5W	P21W	P21W	
MICRA IV (K13) 05/10 →	H4	H4	H11		PY21W / PY21W	WY5W	W5W	W16W	P21/5W	P21/5W	P21W	P21W	W5W
MICRA C+C (K12) 08/05 →	H4	H4	H11		PY21W / PY21W	W5W	W5W		P21/5W	P21/5W	P21W	P21W	
MURANO (Z50) 08/03 → BI-XENON	D2R	D2R			P21W / P21W	W5W	R5W		P21/5W	P21/5W	P21W	P21W	W5W
MURANO (Z51) 11/07 →	D2R	D2R	H8		WY21W / W21W		W5W				W21W	W16W	W5W
NAVARA (D40) 10/04 →	H4	H4	H11		PY21W / P21W	WY5W	W5W		P21/5W	P21/5W	P21W	W16W	W5W
NAVARA Platform/Carrier (D40) 08/08 →	H4	H4	H11		PY21W / P21W	WY5W	W5W		P21/5W	P21/5W	P21W	W16W	W5W
NOTE (E11) 03/06 →	H4	H4	H8		PY21W / W16W	WY5W	W5W	W16W	P21/5W	P21/5W	P21W	W16W	W5W
NOTE (E12) 06/13 →	H4	H4	H11		PY21W / WY21W		W5W		LED	W5W	W21W	W21W	W5W
NP300 04/08 →	H4	H4	H3		P21W / P21W	W5W	W5W		P21/5W	P21/5W	P21W	W16W	W5W
NV200 EVALIA 07/10 →	H4	H4	H8		PY21W / PY21W	W5W	W5W	W16W	P21/5W	P21/5W	P21W	P21W	W5W
NV200 Box 02/10 →	H4	H4	H8		PY21W / PY21W	W5W	W5W	W16W	P21/5W	P21/5W	P21W	P21W	W5W
NV400 Box/Bus 11/11 →	H7	H1	H11		PY21W / PY21W	W5W	W5W	W5W	P21/5W	P21/5W	P21W	P21W	W5W
NV400 Platform/Chasssis 11/11 →	H7	H1	H11		PY21W / P21W	W5W	W5W		P21W	R10W	P21W	P21W	R10W
PATHFINDER (R50) 09/97 → 12/04	H4	H4	HB3		PY21W / WY21W	W5W	W5W	W5W	W21/5W	W21/5W	W21W	W21W	W5W
PATHFINDER (R51) 01/05 →	H4	H4	H11		P21W / P21W	W5W	W5W		P21/5W	P21/5W	P21W	P21W	W5W
PATHFINDER (R51) 01/05 → BI-XENON	D2R	D2R	H11		P21W / P21W	W5W	W5W		P21/5W	P21/5W	P21W	P21W	W5W
PATROL GR I (Y60, GR) 08/87 → 02/98	H4	H4	H3		P21W / P21W	W5W	W5W		P21/5W	P21/5W	P21W	P21W	R10W
PATROL GR II Wagon (Y61) 06/97 →	H4	H4	H3		P21W / P21W	W5W	W5W	W5W	P21/5W	P21/5W	P21W	P21W	W5W
PATROL III (Y62) 04/10 →	H11	H9	H8		WY21W / WY21W	LED	W5W		LED	LED	W21W	W16W	W5W
PATROL III (Y62) 04/10 → XENON	D2S	H9	H8		WY21W / WY21W	LED	W5W		LED	LED	W21W	W16W	W5W
PICK UP (D21) 09/85 → 02/98	H4	H4			P21W / P21W	W5W	W5W		P21/5W	P21/5W	P21W	P21W	W5W

PICK UP (D22) 01/97 →	H4	H4	H3		P21W/ P21W	W5W	W5W		P21/5W	P21/5W	P21W	P21W	W5W
PIXO (UA0) 03/09 →	H4	H4			PY21W / PY21W	WY5W	W5W		P21/5W	P21/5W	P21W	P21W	W5W
PRIMASTAR Box/Bus (X83) 03/01 →	H4	H4	H1		P21W / PY21W	W5W	W5W		P21/5W	P21/5W	P21W	P21W	W5W
PRIMERA (P10) 06/90 → 06/96	H4	H4	H3		P21W / P21W	W5W	W5W		P21/5W	P21/5W	P21W	P21W	W5W
PRIMERA (P11) 06/96 → 05/99	H1	H1	H1		PY21W / P21W	W5W	W5W	W21W	P21/5W	P21/5W	P21W	P21W	W5W
PRIMERA (P11) 06/99 → 12/01	H7	H1	H1		PY21W / P21W	W5W	W5W	W21W	P21/5W	P21/5W	P21W	P21W	W5W
PRIMERA (P11) 06/96 → 12/01 XENON	D2S	H1	H1		PY21W / P21W	W5W	W5W	W21W	P21/5W	P21/5W	P21W	P21W	W5W
PRIMERA (P12) 01/02 →	H7	H7	H11		PY21W / P21W	W5W	W5W	P21W	P21/5W	P21/5W	P21W	P21W	W5W
PRIMERA (P12) 01/02 → XENON	D2R	H7	H11		PY21W / P21W	W5W	W5W	P21W	P21/5W	P21/5W	P21W	P21W	W5W
PRIMERA Hatchback (P10) 06/90 → 06/96	H4	H4	H3		P21W / P21W	W5W	W5W		P21/5W	P21/5W	P21W	P21W	W5W
PRIMERA Hatchback (P11) 06/96 → 07/02	H4	H4	H3		P21W / P21W	W5W	W5W	W21W	P21/5W	P21/5W	P21W	P21W	W5W
PRIMERA Hatchback (P12) 01/02 →	H7	H7	H11		P21W / PY21W	W5W	W5W	P21W	P21/5W	P21/5W	P21W	P21W	W5W
PRIMERA Hatchback (P12) 01/02 → XENON	D2S	H7	H11		P21W / PY21W	W5W	W5W		P21/5W	P21/5W	P21W	P21W	W5W
PRIMERA Estate (WP12) 01/02 →	H7	H7	H11		P21W / PY21W	W5W	W5W	P21W	P21/5W	P21/5W	P21W	P21W	W5W
PRIMERA Estate (WP12) 01/02 → XENON	D2R	H7	H11		P21W / PY21W	W5W	W5W	P21W	P21/5W	P21/5W	P21W	P21W	W5W
PRIMERA Traveller (W10) 07/90 → 03/98	H4	H4	H3		P21W / P21W	W5W	W5W		P21/5W	P21/5W	P21W	P21W	W5W
PRIMERA Traveller (WP11) 06/96 → 05/99	H1	H1	H1		P21W / PY21W	W5W	W5W	W21W	P21/5W	P21/5W	P21W	P21W	W5W
PRIMERA Traveller (WP11) 06/99 → 12/01	H7	H1	H1		P21W / PY21W	W5W	W5W		P21/5W	P21/5W	P21W	P21W	W5W
PRIMERA Traveller (WP11) 06/96 → 12/01 XENON	D2S	H1	H1		P21W / PY21W	W5W	W5W		P21/5W	P21/5W	P21W	P21W	W5W
PULSAR Hatchback (C13) 08/12 →	H11	H8	H11		WY21W / WY21W		W5W		W21W	W5W	W21W	W16W	W5W
PULSAR Hatchback (C13) 08/12 → LED	LED		H11		WY21W / WY21W		LED		W21W	W5W	W21W	W16W	W5W
QASHQAI / QASHQAI +2 (J10, JJ10) 02/07 →	H7	H7	H11		P21W / PY21W	WY5W	W5W		P21/5W	P21/5W	P21W	P21W	W5W
QASHQAI / QASHQAI +2 (J10, JJ10) 02/07 → XENON	D2R	H7	H11		P21W / PY21W	WY5W	W5W		P21/5W	P21/5W	P21W	P21W	W5W
QASHQAI (J11, J11E) 11/13 →	H7	H11	H8		W21W / WY21W		LED	W21W	W16W	LED	W21W	W16W	W5W
QASHQAI (J11, J11E) 11/13 → LED	LED	LED	H8		W21W / WY21W		LED	W21W	W16W	LED	W21W	W16W	W5W
SERENA (C23M) 07/92 → 09/01	H4	H4	H3		P21W / P21W	W5W	W5W	P21W	P21/5W	P21/5W	P21W	P21W	W5W
SUNNY Box (Y10) 11/90 → 03/00	H4	H4			P21W / P21W	W5W	W5W		P21/5W	P21/5W	P21W	P21W	W5W
SUNNY III (N14) 05/90 → 12/96	H4	H4	H3		P21W / P21W	W5W	W5W	P21W	P21/5W	P21/5W	P21W	P21W	W5W
SUNNY III Hatchback (N14) 10/90 → 07/95	H4	H4	H3		P21W / P21W	W5W	W5W		P21/5W	P21/5W	P21W	P21W	W5W
SUNNY III Liftback (N14) 10/90 → 10/95	H4	H4	H3		P21W / P21W	W5W	W5W	W5W	P21/5W	P21/5W	P21W	P21W	W5W
SUNNY III Traveller (Y10) 11/90 → 03/00	H4	H4	H3		P21W / P21W	W5W	W5W		P21/5W	P21/5W	P21W	P21W	W5W
TERRANO I (WD21) 07/86 → 02/96	H4	H4			P21W / P21W	W5W	W5W		P21/5W	P21/5W	P21W	P21W	W5W
TERRANO II (R20) 10/92 →	H4	H4	HB4		P21W / PY21W	W5W	W5W	P21W	P21W	R10W	P21W	P21W	C5W
TIIDA Hatchback (C11X) 09/07 →	H4	H4	H8		PY21W / WY21W	WY5W	W5W		P21/5W	P21/5W	P21W	P21W	W5W
TIIDA Notchback (SC11X) 08/06 →	H4	H4	H8		PY21W / WY21W	WY5W	W5W		P21/5W	P21/5W	P21W	P21W	W5W
URVAN Bus (E24) 06/86 → 05/97	H4	H4			P21W / P21W		W5W		P21/5W	P21/5W	P21W	P21W	R5W
VANETTE Bus (C22) 10/86 → 12/95	H4	H4			P21W / PY21W	W5W	W5W	W5W	P21/5W	P21/5W	P21W	P21W	W5W
VANETTE CARGO Box/Bus (HC 23) 09/94 →	H4	H4			P21W / PY21W	W5W	W5W	W5W	P21/5W	P21/5W	P21W	P21W	W5W
X-TRAIL (T30) 06/01 →	H4	H4	H3		P21W / PY21W	W5W	W5W	W5W	P21/5W	P21/5W	P21W	P21W	W5W
X-TRAIL (T31) 06/07 → SINGLE REFLECTOR	H4	H4	H8		WY21W / W21W	WY5W	W5W		W21/5W	W21/5W	W21W	W21W	W5W
X-TRAIL (T31) 06/07 → DUAL REFLECTOR	H11	H1	H8		WY21W / W21W	WY5W	W5W		W21/5W	W21/5W	W21W	W21W	W5W
X-TRAIL (T31) 06/07 → XENON	D2S	HB3	H8		WY21W / W21W	WY5W	W5W		W21/5W	W21/5W	W21W	W21W	W5W
X-TRAIL (T31) 06/07 → BI-XENON	D2S	D2S	H8		WY21W / W21W	WY5W	W5W		W21/5W	W21/5W	W21W	W21W	W5W
X-TRAIL (T32) 12/13 →	H11	H9	H11		WY21W / WY21W		LED		W21W	W5W	W21W	W16W	W5W
X-TRAIL (T32) 12/13 → LED	LED	LED	H11		WY21W / WY21W		LED		W21W	W5W	W21W	W16W	W5W

OPEL													
ADAM 10/12 →	H7	H1		W21/5W	PY21W / -	WY5W	W21/5W		W16W	W3W			W5W
AGILA (A) (H00) 09/00 → 12/07	H4	H4	H3		PY21W / P21W	W5W	W5W	W5W	P21/5W	P21/5W	P21W	P21W	R10W
AGILA (B) (H08) 04/08 →	H4	H4	H11		PY21W / PY21W	W5W	W5W		P21/5W	P21/5W	P21W	W16W	W5W
AMPERA 11/11 →						WY5W	W5W		LED	LED	W16W	W16W	W5W
ANTARA 05/06 →	H7	H7	H8		P21W / P21W	W5W	W5W		P21/5W	P21/5W	P21W	W16W	W5W
ARENA Estate (THB, TB, TF) 03/98 → 08/01	H4	H4			P21W / P21W	W5W	W5W		P21/5W	P21/5W	P21W	P21W	C5W
ASTRA F (56_, 57_) 08/94 → 09/98	H4	H4	H3		P21W / PY21W	W5W	W5W		P21W	P21/4W	P21/4W	P21W	R10W
ASTRA F Convertible (53_B) 03/93 → 03/01	H4	H4	H3		P21W / PY21W	W5W	W5W		P21W	P21/4W	P21/4W	P21W	R10W
ASTRA F Caravan (51_, 52_) 08/94 → 01/98	H4	H4	H3		P21W / PY21W	W5W	W5W		P21W	P21/4W	P21/4W	P21W	C5W
ASTRA F CC (53_, 54_, 58_, 59_) 08/94 → 01/98	H4	H4	H3		P21W / PY21W	W5W	W5W		P21W	P21/5W	P21W	P21W	C5W
ASTRA F CLASSIC Caravan 01/98 → 01/05	H4	H4	H3		P21W / PY21W	W5W	W5W		P21W	P21/4W	P21/4W	P21W	C5W
ASTRA F CLASSIC CC 01/98 → 08/02	H4	H4	H3		P21W / PY21W	W5W	W5W		P21W	R5W	P21W	P21W	R10W
ASTRA F CLASSIC Notchback 01/98 - 08/02	H4	H4	H3		P21W / PY21W	W5W	W5W		P21W	P21/4W	P21/4W	P21W	R10W
ASTRA F Van (55_) 08/94 → 01/99	H4	H4	H3		P21W / PY21W	W5W	W5W		P21W	P21/4W	P21/4W	P21W	C5W
ASTRA G Box (F70) 01/99 → 04/05	H7	HB3	H3		P21W / PY21W	W5W	W5W		P21/5W	P21/5W	P21W	P21W	C5W
ASTRA G Box (F70) 01/99 → 04/05 XENON	D2S	H7	H3		P21W / PY21W	W5W	W5W		P21/5W	P21/5W	P21W	P21W	C5W
ASTRA G Convertible 03/01 → 10/05	H7	HB3	H3		P21W / PY21W	W5W	W5W		P21/5W	P21/5W	P21W	P21W	R10W
ASTRA G Convertible 03/01 → 10/05 XENON	D2S	H7	H3		P21W / PY21W	W5W	W5W		P21/5W	P21/5W	P21W	P21W	R10W
ASTRA G Caravan (F35_) 02/98 → 12/09	H7	HB3	H3 / H11		P21W / PY21W	W5W	W5W		P21/5W	P21/5W	P21W	P21W	C5W
ASTRA G Caravan (F35_) 02/98 → 12/09 XENON	D2S	H7	H3 / H11		P21W / PY21W	W5W	W5W		P21/5W	P21/5W	P21W	P21W	C5W
ASTRA G CC (F48_, F08_) 02/98 → 12/09	H7	HB3	H3 / H11		P21W / PY21W	W5W	W5W		P21/5W	P21/5W	P21W	P21W	R10W
ASTRA G CC (F48_, F08_) 02/98 → 12/09 XENON	D2S	H7	H3 / H11		P21W / PY21W	W5W	W5W		P21/5W	P21/5W	P21W	P21W	R10W
ASTRA G Coupe (F07_) 03/00 → 05/05	H7	HB3	H3		P21W / PY21W	W5W	W5W		P21/5W	P21/5W	P21W	P21W	R10W
ASTRA G Coupe (F07_) 03/00 → 05/05 XENON	D2S	H7	H3		P21W / PY21W	W5W	W5W		P21/5W	P21/5W	P21W	P21W	R10W
ASTRA G Notchback (F69_) 09/98 → 12/09	H7	HB3	H3		P21W / PY21W	W5W	W5W		P21/5W	P21/5W	P21W	P21W	R10W
ASTRA G Notchback (F69_) 09/98 → 12/09 XENON	D2S	H7	H3		P21W / PY21W	W5W	W5W		P21/5W	P21/5W	P21W	P21W	R10W
ASTRA GTC J 10/11 →			H10	W21/5W	PY21W / WY21W	W5W	W21/5W		P21W	W5W		W16W	W5W
ASTRA GTC J 10/11 → BI-XENON	D1S	D1S	H10	LED	PY21W / WY21W	W5W	W21/5W		P21W	W5W		W16W	W5W
ASTRA H 03/04 →	H7	H1	H3		P21W / PY21W	W5W	W5W		P21W	P21W	P21W	P21W	W5W
ASTRA H 03/04 → XENON	D2S	H1	H3		P21W / PY21W	W5W	W5W		P21W	P21W	P21W	P21W	W5W
ASTRA H Caravan 08/04 →	H7	H1	H3 / H11		PY21W / H21W	W5W	W5W		P21W	P21W	P21W	P21W	W5W
ASTRA H Caravan 08/04 → XENON	D2S	H1	H3 / H11		PY21W / H21W	W5W	W5W		P21W	P21W	P21W	P21W	W5W
ASTRA H GTC 03/05 →	H7	H1	H3 / H11		PY21W / H21W	W5W	W5W		P21W	P21W	P21W	P21W	C5W
ASTRA H GTC 03/05 → XENON	D2S	H1	H3 / H11		PY21W / H21W	W5W	W5W		P21W	P21W	P21W	P21W	C5W
ASTRA H Notchback 02/07 →	H7	H1	H3 / H11		PY21W / PY21W	H21W	W5W		P21W	W5W	P21W	P21W	
ASTRA H Notchback 02/07 → XENON	D2S	H1	H3 / H11		PY21W / PY21W	H21W	W5W		P21W	W5W	P21W	P21W	
ASTRA H TwinTop 09/05 →	H7	H1	H3 / H11		PY21W / H21W	W5W	W5W		P21W	W5W	P21W	P21W	C5W
ASTRA H TwinTop 09/05 → XENON	D2S	H1	H3 / H11		PY21W / H21W	W5W	W5W		P21W	W5W	P21W	P21W	C5W
ASTRA H Van 02/04 →	H7	H1	H3		PY21W / H21W	W16W	W5W		P21W	W5W	H21W	P21W	W5W
ASTRA H Van 02/04 → XENON	D2S	H7	H3		PY21W / H21W	W16W	W5W		P21W	W5W	H21W	P21W	W5W
ASTRA J 12/09 →	H7	H7	H10	W21/5W	W16W	WY5W	W21/5W		W16W	W5W	H21W	H21W	W5W
ASTRA J 12/09 → BI-XENON	D1S	D1S	H10	LED	W16W	WY5W	W21/5W		W16W	W5W	H21W	H21W	W5W
ASTRA Sports Tourer (J) 10/10 →	H7	H7	H10	W21/5W	W16W	WY5W	W21/5W		P21W	W5W	H21W	H21W	W5W
ASTRA Sports Tourer (J) 10/10 → XENON	D1S	D1S	H10	LED	W16W	WY5W	W21/5W		P21W	W5W	H21W	H21W	W5W
CALIBRA A (85_) 06/90 → 07/97	H1	H1	H3		P21W / P21W	W5W	W5W		P21/5W	P21/5W	P21W	P21W	C5W

CAMPO (TF_) 08/87 →	H4	H4			P21W / P21W	W5W	W5W		P21/5W	P21/5W	P21W	P21W	W5W
CASCADA (W13) 03/13 →	HIR2		H11	W21/5W	PY21W / PY21W	WY5W	W21/5W		LED	P21W	LED	W16W	W5W
CASCADA (W13) 03/13 → BI-XENON	D1S	D1S	H11	LED	PY21W / PY21W	WY5W	LED		LED	P21W	LED	W16W	W5W
COMBO (71_) 07/94 → 10/01	H4	H4			P21W / P21W	W5W	W5W		P21/5W	P21/5W	P21W	P21W	T4W
COMBO Tour 10/01 →	H7	H7	H3		PY21W / PY21W	W5W	W5W		P21/5W	P21/5W	P21W	P21W	C5W
COMBO (X12) 02/12 →	H7	H1	H1	P21W	PY21W / PY21W		W5W	W5W	P21W	P21/4W	P21/4W	W16W	W5W
COMBO Box (X12) 02/12 →	H7	H1	H1	P21W	PY21W / PY21W		W5W	W5W	P21W	P21/4W	P21/4W	W16W	W5W
CORSA B (73_, 78_, 79_) 03/93 → 09/00	H4	H4	H3		P21W / P21W	W5W	W5W		P21W	R5W	P21W	P21W	R10W
CORSA B Box (73_) 08/99 → 09/00	H4	H4			P21W / P21W	W5W	W5W		P21W	R5W	P21W	P21W	R10W
CORSA B Estate (F35) 01/99 →	H4	H4	H3		P21W / P21W	W5W	W5W		P21W	R5W	P21W	P21W	
CORSA C (F08, F68) 09/00 → EARLY MODELS	H1	H1	H3		PY21W / PY21W	WY5W	W5W		P21/5W	P21/5W	P21W	P21W	W5W
CORSA C (F08, F68) 09/00 → LATE MODELS	H7	H7	H3		PY21W / PY21W	WY5W	W5W		P21/5W	P21/5W	P21W	P21W	W5W
CORSA C Box (F08, W5L) 09/00 →	H7	H7	H3		PY21W / PY21W	WY5W	W5W		P21/5W	P21/5W	P21W	P21W	W5W
CORSA D 07/06 →	H7	H1	H3 / H10	W21/5W	PY21W / PY21W	W5W	W5W		P21/5W	P21/5W	P21W	P21W	W5W
CORSA D Van 07/06 →	H7	H1	H3 / H10	W21/5W	PY21W / PY21W	W5W	W5W		P21/5W	P21/5W	P21W	P21W	W5W
CORSA E 09/14 →	H7	H7	H10	W21/5W	/ PY21W	W5W	W21/5W		P21W	LED	P21W	P21W	W5W
CORSA E 09/14 → BI-XENON		H11	H10	LED	/ PY21W	W5W	LED		P21W	LED	P21W	P21W	W5W
FRONTERA A (5_MWL4) 03/92 → 10/98	H4	H4	H3		P21W / P21W	W5W	W5W		P21/5W	P21/5W	P21W	P21W	W5W
FRONTERA A Sport (5_SUD2) 03/92 → 10/98	H4	H4	H3		P21W / P21W	W5W	W5W		P21/5W	P21/5W	P21W	P21W	W5W
FRONTERA B (6B_) 10/98 →	H4	H4	H3		P21W / P21W	W5W	W5W	W5W	P21/5W	P21/5W	P21W	P21W	R10W
GT Convertible 06/07 →	H11	H9	H11		P27/7W					P27/7W	W21W	W21W	
INSIGNIA 07/08 →	H7	H1	H10	W21/5W	PY21W / PY21W	W5W	W21/5W		R10W	R10W	H21W	H21W	W5W
INSIGNIA 07/08 → XENON	D1S	H1	H10	LED	PY21W / PY21W	W5W	W21/5W		R10W	R10W	H21W	H21W	W5W
INSIGNIA Sports Tourer 07/08 →	H7	H1	H10	W21/5W	PY21W / PY21W	W5W	W21/5W		P21W	W5W	H21W	H21W	W5W
INSIGNIA Sports Tourer 07/08 → XENON	D1S	H1	H10	LED	PY21W / PY21W	W5W	W21/5W		P21W	W5W	H21W	H21W	W5W
INSIGNIA Notchback 07/08 →	H7	H1	H10	W21/5W	PY21W / PY21W	W5W	W21/5W		R10W	R10W	H21W	H21W	W5W
INSIGNIA Notchback 07/08 → XENON	D1S	H1	H10	LED	PY21W / PY21W	W5W	W21/5W		R10W	R10W	H21W	H21W	W5W
MERIVA 05/03 → 05/10	H7	H1	H3		PY21W / PY21W	WY5W	W5W		P21W	R5W	P21W	P21W	W5W
MERIVA 05/03 → 05/10 XENON	D1S	H7	H3		PY21W / PY21W	WY5W	W5W		P21W	R5W	P21W	P21W	W5W
MERIVA B 06/10 →	H7	H1	H10	W21/5W	PY21W / PY21W	W16W	W21/5W		W16W	W16W	W21W	W16W	W5W
MOKKA 06/12 →	H7	H1	H11	W21/5W	WY21W / WY21W	WY5W	W21/5W		W21/5W	W21/5W	W21W	W16W	W5W
MOKKA 06/12 → XENON	D3S	H1	H11	LED	WY21W / WY21W	WY5W	W21/5W		W21/5W	W21/5W	W21W	W16W	W5W
MONTEREY A (UBS_) 09/91 → 07/98	H4	H4	H3		P21W / PY21W	WY5W	R5W		P21/5W	P21/5W	P21W	P21W	W5W
MONTEREY B 07/98 → 08/99	H4	H4	H3		P21W / PY21W	W5W	R5W		P21/5W	P21/5W	P21W	P21W	W5W
MOVANO 07/98 → 12/03	H4	H4	H1		P21W / P21W	W5W	W5W		P21/5W	P21/5W	P21W	P21W	C5W
MOVANO 01/04 →	H7	H1	H1		PY21W / PY21W	W5W / WY5W	W5W		P21/5W	P21/5W	P21W	P21W	C5W
MOVANO B Box/Bus 12/10 →	H7	H1	H11	P21W	PY21W / PY21W	WY5W	W5W	W5W	P21/5W	P21/5W	P21W	P21W	W5W
MOVANO Box, Estate (J9) 07/98 → SINGLE REFLECTOR	H4	H4	H1		P21W / PY21W	W5W / WY5W	W5W	P21W	P21/5W	P21/5W	P21W	P21W	C5W
MOVANO Box, Estate (J9) 07/98 → DUAL REFLECTOR	H7	H1	H1		P21W / PY21W	W5W / WY5W	W5W	P21W	P21/5W	P21/5W	P21W	P21W	C5W
OMEGA B (25_, 26_, 27_) 03/94 → 07/03	H1	H1	H1 / HB4		PY21W / PY21W	W5W	W5W	P21W	P21/5W	P21/5W	P21W	P21W	R5W
OMEGA B (25_, 26_, 27_) 03/94 → 07/03 XENON	D2S	H7	H1 / HB4		PY21W / PY21W	W5W	W5W	P21W	P21/5W	P21/5W	P21W	P21W	R5W
OMEGA B Caravan (21_, 22_, 23_) 03/94 → 08/97 TAILLIGHT	H1	H1	H1		PY21W / PY21W	W5W	W5W		P21W	R5W	P21/4W	P21W	R10W
OMEGA B Caravan (21_, 22_, 23_) 03/94 → 08/97 TAIL/STOPLIGHT	H1	H1	H1		PY21W / PY21W	W5W	W5W	P21W	P21/5W	P21/5W	P21/4W	P21W	R10W
OMEGA B Caravan (21_, 22_, 23_) 09/97 → 08/99 TAILLIGHT	H1	H7	H1		PY21W / PY21W	W5W	W5W		P21W	R5W	P21/4W	P21W	R10W
OMEGA B Caravan (21_, 22_, 23_) 09/97 → 08/99 TAIL/STOPLIGHT	H1	H7	H1		PY21W / PY21W	W5W	W5W	P21W	P21/5W	P21/5W	P21/4W	P21W	R10W
OMEGA B Caravan (21_, 22_, 23_) 09/99 → TAILLIGHT	H1	H7	HB4		PY21W / PY21W	W5W	W5W		P21W	R5W	P21/4W	P21W	R10W

OMEGA B Caravan (21_, 22_, 23_) 09/99 → TAIL/STOPLIGHT	H1	H7	HB4		PY21W / PY21W	W5W	W5W	P21W	P21/5W	P21/5W	P21/4W	P21W	R10W
OMEGA B Caravan (21_, 22_, 23_) 03/94 → 08/99 XENON	D2S	H7	H1		PY21W / PY21W	W5W	W5W	P21W	P21/5W	P21/5W	P21/4W	P21W	R10W
SIGNUM 05/03 → 08/05	H7	H7	H3		P21W / PY21W	W5W	W5W		P21W	P21W	P21W	P21W	R10W
SIGNUM 05/03 → 08/05 Bi-XENON	D2S	D2S	H3		P21W / PY21W	W5W	W5W		P21W	P21W	P21W	P21W	R10W
SIGNUM (Facelift) 09/05 → BI-XENON	D1S	D1S	H3		P21W / PY21W	W5W	W5W		P21W	P21W	P21W	P21W	R10W
SIGNUM 05/03 → CORNERING LIGHT	H11	H1	H3		P21W / PY21W	W5W	W5W		P21W	P21W	P21W	P21W	R10W
SINTRA 11/96 → 04/99	H4		H1		PY21W / PY21W	W5W	W5W		P21/5W	P21/5W	P21W	P21W	W5W
SPEEDSTER 09/00 →	H1	H7	H1		PY21W / PY21W	W5W	T4W		P21/5W	P21/5W	P21W	P21W	C5W
TIGRA (95_) 07/94 → 12/00	H1	H1	H1		PY21W / PY21W	W5W	W5W	R5W	P21/5W	P21/5W	P21W	P21W	R10W
TIGRA Twin Top 06/04 →	H7	H1	H11		PY21W / PY21W	W5W	W5W		P21/5W	P21/5W	P21W	P21W	W5W
VECTRA A (86_, 87_) 08/88 → 11/95	H4	H4	H3		P21W / P21W	W5W	W5W		P21W	P21/4W	P21/4W	P21W	R10W
VECTRA B (36_) 09/95 → 04/02	H7	H1	H3		PY21W / PY21W	W5W	W5W	W5W	P21W	R5W	P21/4W	P21W	C5W
VECTRA B (36_) 10/95 → 04/02 XENON	D2S	H7	H3		PY21W / PY21W	W5W	W5W		P21W	R5W	P21/4W	P21W	C5W
VECTRA B Caravan (31_) 11/96 → 07/03	H7	H1	H3		PY21W / PY21W	W5W	W5W		P21W	P21/4W	P21/4W	P21W	C5W
VECTRA B Caravan (31_) 11/96 → 07/03 XENON	D2S	H7	H3		PY21W / PY21W	W5W	W5W		P21W	P21/4W	P21/4W	P21W	C5W
VECTRA B CC (38_) 10/95 → 07/03	H7	H1	H3		PY21W / PY21W	W5W	W5W	W5W	P21W	R5W	P21/4W	P21W	C5W
VECTRA B CC (38_) 10/95 → 07/03 XENON	D2S	H7	H3		PY21W / PY21W	W5W	W5W		P21W	R5W	P21/4W	P21W	C5W
VECTRA C Caravan, GTS 04/02 → 08/05	H7	H7	H3		PY21W / PY21W	W5W	W5W		P21W	P21W	P21W	P21W	W5W
VECTRA C Caravan, GTS 04/02 → 08/05 XENON GEN I	D1S	D1S	H3		PY21W / PY21W	W5W	W5W		P21W	P21W	P21W	P21W	W5W
VECTRA C Caravan, GTS 04/02 → 08/05 XENON GEN II	D2S	D2S	H3		PY21W / PY21W	W5W	W5W		P21W	P21W	P21W	P21W	W5W
VECTRA C Caravan, GTS 04/02 → 08/05 CORNERING LIGHT	H11	H1	H3		PY21W / PY21W	W5W	W5W		P21W	P21W	P21W	P21W	W5W
VIVARO Box, Estate (J7) 08/01 →	H4	H4	H1		P21W/ PY21W	W5W	W5W	P21W	P21/5W	P21/5W	P21W	P21W	W5W
VIVARO Box, Estate 06/14 →	H4	H4	H11 / H16		PY21W / PY21W	WY5W	W21/5W	P21W	P21/5W	P21/5W	W16W	W16W	W5W
VX220 08/01 →	H1	H7	H1		PY21W / PY21W		T4W		P21/5W	P21/5W	P21W	P21W	C5W
ZAFIRA A (F75_) 04/99 → 06/05	H7	HB3	H3		P21W / PY21W	W5W	W5W		P21/5W	P21/5W	P21W	P21W	C5W
ZAFIRA A (F75_) 04/99 → 06/05 XENON	D2S	H7	H3		P21W / PY21W	W5W	W5W		P21/5W	P21/5W	P21W	P21W	C5W
ZAFIRA B (A05) 07/05 →	H7	H1	H3		H21W / P21W	W5W	W5W		P21W	P21W	P21W	P21W	W5W
ZAFIRA B (A05) 07/05 → BI-XENON	D1S	D1S	H3		H21W / P21W	W5W	W5W		P21W	P21W	P21W	P21W	W5W
ZAFIRA B Van 07/05 →	H7	H1	H3		H21W / P21W	W5W	W5W		P21W	P21W	P21W	P21W	W5W
ZAFIRA B Van 07/05 → BI-XENON	D1S	D1S	H3		H21W / P21W	W5W	W5W		P21W	P21W	P21W	P21W	W5W
ZAFIRA TOURER C (P12) 10/11 →	HIR2	H7	H10	W21/5W	PY21W / PY21W	WY5W	W21/5W		P21W	W5W	P21W	W16W	W5W
ZAFIRA TOURER C (P12) 10/11 → BI-XENON	D1S	D1S	H10	LED	PY21W / PY21W	WY5W	W21/5W		P21W	W5W	P21W	W16W	W5W
PEUGEOT													
1007 (KM_) 04/05 →	H4	H4	H1		P21W / PY21W	WY5W	W5W	W5W	P21/5W	P21/5W	P21W	P21W	W5W
106 I (1A, 1C) 08/91 → 04/96	H4	H4	H3		P21W / P21W	W5W	W5W	W5W	P21/5W	P21/5W	P21W	P21W	W5W
106 II (1) 04/96 →	H4	H4	H3		PY21W / PY21W	WY5W	W5W	W2,3W	P21/5W	P21/5W	P21W	P21W	W5W
107 06/05 →	H4	H4			P21W / PY21W	WY5W	W5W	W5W	P21/5W	P21/5W	P21W	P21W	W5W
108 05/14 →	HIR2	HIR2		LED	PY21W / PY21W		LED	W5W	P21/5W	P21/5W	P21W	P21W	W5W
2008 03/13 →	H7	H7		LED	/ PY21W	WY5W	LED		P21W	LED	P21W	P21W	W5W
205 VAN 03/94 → 09/98	H4	H4	H1		P21W / PY21W	T4W	T4W / W5W		P21/5W	P21/5W	P21W	P21W	R5W
206 CC (2D) 09/00 →	H7	H7	H1		PY21W / PY21W	WY5W	W5W	W2,3W	P21/5W	P21/5W	P21W	P21W	W5W
206 Hatchback 03/07 →	H7	H1	H1		PY21W / P21W	WY5W	W5W	W5W	P21/5W	P21/5W	P21W	P21W	W5W
206 Notchback (2A/C) 08/98 → SINGLE REFLECTOR	H4	H4	H1		PY21W / PY21W	WY5W	W5W	W2,3W	P21/5W	P21/5W	P21W	P21W	W5W
206 Notchback (2A/C) 08/98 → DUAL REFLECTOR	H7	H7	H1		PY21W / PY21W	WY5W	W5W	W2,3W	P21/5W	P21/5W	P21W	P21W	W5W
206 SW (2E/K) 07/02 → SINGLE REFLECTOR	H4	H4	H1		P21W / PY21W	W5W/ WY5W	W5W	W2,3W	P21/5W	P21/5W	P21W	P21W	W5W
206 SW (2E/K) 07/02 → DUAL REFLECTOR	H7	H7	H1		P21W / PY21W	W5W/ WY5W	W5W	W2,3W	P21/5W	P21/5W	P21W	P21W	W5W

206+ (T3E) 01/09 →	H7	H1	H11		PY21W / PY21W	WY5W	W5W	W5W	P21/5W	P21/5W	P21W	P21W	W5W
207 (WA_, WC_) 02/06 →	H7	H1	H11		PY21W / WY21W	WY5W		W5W	P21W	R5W	P21W	P21W	W5W
207 CC (WD_) 02/07 →	H7	H1	H11		PY21W / WY21W	WY5W	W5W		P21W	R5W	P21W	P21W	W5W
207 Notchback 12/07 →	H7	H1	H11		PY21W / WY21W	WY5W	W5W	W5W	P21W	R5W	P21W	P21W	W5W
207 SW (WK_) 02/07 →	H7	H1	H11		PY21W / WY21W	WY5W	W5W	W5W	P21W	R5W	P21W	P21W	W5W
207 Van 04/07 →	H7	H1	H11		PY21W / PY21W	WY5W	W5W	W5W	P21W	R5W	P21W	P21W/ R10W	W5W
208 03/12 →	H7	H7			PY21W / PY21W		W21/5W		P21W	R5W	P21W	R10W	W5W
3008 06/09 →	H7	H7			/ PY21W	W5W	W5W		W5W	P21/5W	P21W	P21W	W5W
3008 06/09 → BI-XENON	D1S	D1S			/ PY21W	W5W	P21/5W		P21/5W	P21/5W	P21W	P21W	W5W
301 11/12 →	H7	H1	H11	W21/5W	PY21W / PY21W		W5W / W21/5W	W5W	P21/5W	P21/5W	P21W	R10W	W5W
306 (7B, N3, N5) 04/93 → 04/97 SINGLE REFLECTOR	H4	H4	H3		P21W / PY21W	T4W	W5W	W5W	P21/5W	P21/5W	P21W	P21W	W5W
306 (7B, N3, N5) 05/97 → 05/01 SINGLE REFLECTOR	H4	H4	H1		PY21W / PY21W	WY5W	W5W	W5W	P21/5W	P21/5W	P21W	P21W	W5W
306 (7B, N3, N5) 04/93 → 04/97 DUAL REFLECTOR	H1	H1	H3		P21W / PY21W	T4W	W5W	W5W	P21/5W	P21/5W	P21W	P21W	W5W
306 (7B, N3, N5) 05/97 → 05/01 DUAL REFLECTOR	H7	H7	H1		PY21W / PY21W	WY5W	W5W	W5W	P21/5W	P21/5W	P21W	P21W	W5W
306 Break (7E, N3, N5) 06/94 → 04/02 SINGLE REFLECTOR	H4	H4	H1		P21W / PY21W	WY5W	W5W	W5W	P21/5W	P21/5W	P21W	P21W	W5W
306 Break (7E, N3, N5) 06/94 → 04/02 DUAL REFLECTOR	H7	H7	H1		P21W / PY21W	WY5W	W5W	W5W	P21/5W	P21/5W	P21W	P21W	W5W
306 Convertible (7D, N3, N5) 03/94 → 04/97 SINGLE REFLECTOR	H4	H4	H3		P21W / PY21W	WY5W	W5W	W5W	P21/5W	P21/5W	P21W	P21W	W5W
306 Convertible (7D, N3, N5) 05/97 → 04/02 SINGLE REFLECTOR	H4	H4	H1		PY21W / PY21W	WY5W	W5W	W5W	P21/5W	P21/5W	P21W	P21W	W5W
306 Convertible (7D, N3, N5) 03/94 → 04/97 DUAL REFLECTOR	H1	H1	H3		P21W / PY21W	WY5W	W5W	W5W	P21/5W	P21/5W	P21W	P21W	W5W
306 Convertible (7D, N3, N5) 05/97 → 04/02 DUAL REFLECTOR	H7	H7	H1		PY21W / PY21W	WY5W	W5W	W5W	P21/5W	P21/5W	P21W	P21W	W5W
306 Notchback (7A, 7C, N3, N5) 04/93 → 04/97 SINGLE REFLECTOR	H4	H4	H3		P21W / PY21W	T4W	W5W	W5W	P21/5W	P21/5W	P21W	P21W	W5W
306 Notchback (7A, 7C, N3, N5) 05/97 → 08/01 SINGLE REFLECTOR	H4	H4	H1		PY21W / PY21W	WY5W	W5W	W5W	P21/5W	P21/5W	P21W	P21W	W5W
306 Notchback (7A, 7C, N3, N5) 04/93 → 04/97 DUAL REFLECTOR	H1	H1	H3		P21W / PY21W	T4W	W5W	W5W	P21/5W	P21/5W	P21W	P21W	W5W
306 Notchback (7A, 7C, N3, N5) 05/97 → 08/01 DUAL REFLECTOR	H7	H7	H1		PY21W / PY21W	WY5W	W5W	W5W	P21/5W	P21/5W	P21W	P21W	W5W
307 (3A/C) 08/00 → HALOGEN	H7	H1	H1		P21W / PY21W	WY5W	W5W	W5W	P21W	R5W	P21W	P21W	W5W
307 (3A/C) 08/00 → XENON	D1S	H1	H1		P21W / PY21W	WY5W	W5W	W5W	P21W	R5W	P21W	P21W	W5W
307 Break (3E) 03/02 → HALOGEN	H7	H1	H1		P21W / PY21W	WY5W	W5W	W5W	P21W	R5W	P21W	P21W	W5W
307 Break (3E) 03/02 → XENON	D1S	H1	H1		P21W / PY21W	WY5W	W5W	W5W	P21W	R5W	P21W	P21W	W5W
307 CC (3B) 10/03 → HALOGEN	H7	H1	H1		P21W / PY21W	WY5W	W5W	W5W	LED	LED	P21W	P21W	W5W
307 CC (3B) 10/03 → XENON	D1S	H1	H1		P21W / PY21W	WY5W	W5W	W5W	LED	LED	P21W	P21W	W5W
307 SW (3H) 03/02 → HALOGEN SINGLE REFLECTOR	H1	H1	H1		P21W / PY21W	WY5W	W5W	W5W	P21W	R5W	P21W	P21W	W5W
307 SW (3H) 03/02 → HALOGEN DUAL REFLECTOR	H7	H7	H1		P21W / PY21W	WY5W	W5W	W5W	P21W	R5W	P21W	P21W	W5W
307 SW (3H) 03/02 → XENON	D1S	H7	H11		P21W / PY21W	WY5W	W5W	W5W	P21W	R5W	P21W	P21W	W5W
308 (4A_, 4C_) 09/07 → HALOGEN	H7	H1	H8		P21W / PY21W	WY5W	P21/5W	W5W	P21/5W	P21/5W	P21W	P21W	W5W
308 (4A_, 4C_) 09/07 → XENON	D1S	H1	H8		P21W / PY21W	WY5W	P21/5W	W5W	P21/5W	P21/5W	P21W	P21W	W5W
308 CC 04/09 →	H7	H1	H8		PY21W / LED	WY5W	P21/5W	LED	LED	LED	P21W	P21W	W5W
308 CC 04/09 → BI-XENON	D1S	D1S	H8		PY21W / LED	WY5W	P21/5W	LED	LED	LED	P21W	P21W	W5W
308 SW 09/07 → HALOGEN	H7	H1	H8		P21W / PY21W	WY5W	P21/5W	W5W	P21/5W	P21/5W	P21W	P21W	W5W
308 SW 09/07 → BI-XENON	D1S	D1S	H8		P21W / PY21W	WY5W	P21/5W	W5W	P21/5W	P21/5W	P21W	P21W	W5W
308 II 09/13 →	H7	HB3	H11	LED	PY21W / PY21W		LED		LED	LED	P21W	W16W	W5W
308 II 09/13 → LED	LED	LED	H11	LED	PY21W / PY21W		LED		LED	LED	P21W	W16W	W5W
308 II SW 03/14 →	H7	HB3	H11	LED	PY21W / PY21W		LED		LED	LED	P21W	W16W	W5W
308 II SW 03/14 → LED	LED	LED	H11	LED	PY21W / PY21W		LED		LED	LED	P21W	W16W	W5W
4007 (GP_) 02/07 →	H11	H7	H11		PY21W / WY21W		W5W		W21/5W	W21/5W	W21W	W21W	W5W

4007 (GP_) 02/07 → XENON	D2S	H7	H11		PY21W / WY21W		W5W		W21/5W	W21/5W	W21W	W21W	W5W
405 II (4B) 08/92 → 10/95 SINGLE REFLECTOR	H4	H4	H3		PY21W / P21W	T4W	W5W	P21W	P21/5W	P21/5W	P21W	P21W	R5W
405 II (4B) 08/92 → 10/95 DUAL REFLECTOR	H1	H3	H3		PY21W / P21W	T4W	W5W	P21W	P21/5W	P21/5W	P21W	P21W	R5W
405 II Break (4E) 08/92 → 10/96 SINGLE REFLECTOR	H4	H4	H3		PY21W / P21W	T4W	W5W	P21W	P21/5W	P21/5W	P21W	P21W	R5W
405 II Break (4E) 08/92 → 10/96 DUAL REFLECTOR	H1	H3	H3		PY21W / P21W	T4W	W5W	P21W	P21/5W	P21/5W	P21W	P21W	R5W
406 (8B) 10/95 → 05/04	H7	H7	H1		PY21W / P21W	W5W / WY5W	W5W		P21/5W	P21/5W	P21W	P21W	W5W
406 Break (8E/F) 10/96 → 10/04	H7	H7	H1		PY21W / P21W	W5W / WY5W	W5W		P21/5W	P21/5W	P21W	P21W	W5W
406 Coupe (8C) 03/97 → 12/04	H7	H7	H1		PY21W / PY21W	W5W / WY5W	W5W		P21/5W	P21/5W	P21W	P21W	W5W
407 (6D_) 05/04 → HALOGEN	H1	H7	H11		P21W / PY21W	WY5W	W5W		P21/4W	P21/4W	P21/4W	P21W	W5W
407 (6D_) 05/04 → XENON	D2S	H7	H11		P21W / PY21W	WY5W	W5W		P21/4W	P21/4W	P21/4W	P21W	W5W
407 Coupe (6C_) 10/05 → BI-XENON	D1S	D1S	H11		PY21W / PY21W	WY5W	W5W		P21/5W	P21/5W	P21W	P21W	W5W
407 SW (6E_) 05/04 → HALOGEN	H1	H7	H11		P21W / PY21W	WY5W	W5W		P21/5W	P21/5W	P21W	P21W	W5W
407 SW (6E_) 05/04 → XENON	D2S	H7	H11		P21W / PY21W	WY5W	W5W		P21/5W	P21/5W	P21W	P21W	W5W
408 02/10 → HALOGEN	H7	H1	H8		P21W / PY21W	WY5W	P21/5W	W5W	P21/5W	P21/5W	P21W	P21W	W5W
408 02/10 → XENON	D1S	H1	H8		P21W / PY21W	WY5W	P21/5W	W5W	P21/5W	P21/5W	P21W	P21W	W5W
5008 06/09 → HALOGEN	H7	H7			/ PY21W	WY5W	W5W	W5W	P21W	LED	P21W	P21W	W5W
5008 06/09 → BI-XENON	D1S	D1S		P21/5W	/ PY21W	WY5W	P21/5W	W5W	P21W	LED	P21W	P21W	W5W
508 11/10 → HALOGEN	H7	H7	H8		PY21W / PY21W	LED	W5W		LED	LED	H21W	P21W	W5W
508 11/10 → BI-XENON	D1S	D1S	H8		PY21W / PY21W	LED	W5W		LED	LED	H21W	P21W	W5W
508 SW 11/10 → HALOGEN	H7	H7	H8		PY21W / PY21W	LED	W5W		LED	LED		W16W	W5W
508 SW 11/10 → BI-XENON	D1S	D1S	H8		PY21W / PY21W	LED	W5W		LED	LED		W16W	W5W
605 (6B) 10/95 → 09/99	H7	H7	H1		P21W / PY21W	W5W	W5W	W5W	P21/5W	P21/5W	P21W	P21W	W5W
607 (9D, 9U) 01/00 → HALOGEN	H7	H1	H1		P21W / PY21W	WY5W	W5W		P21/5W	P21/5W	P21W	P21W	W5W
607 (9D, 9U) 01/00 → XENON	D2R	H1	H1		P21W / PY21W	WY5W	W5W		P21/5W	P21/5W	P21W	P21W	W5W
806 (221) 06/94 → 08/02 TAIL/STOPLIGHT	H1	H1	H3		P21W / PY21W	W5W/ WY5W	W5W	W5W	P21/5W	P21/5W	P21W	P21W	W5W
806 (221) 06/94 → 08/02 TAILLIGHT	H1	H1	H3		P21W / PY21W	W5W/ WY5W	W5W	W5W	P21/5W	R5W	P21W	P21W	W5W
807 (E) 06/02 → TAIL/STOPLIGHT	H7	H7	H1		P21W / PY21W	WY5W	W5W		P21/5W	P21/5W	P21W	P21W	W5W
807 (E) 06/02 → TAILLIGHT	H7	H7	H1		P21W / PY21W	WY5W	W5W		P21/5W	R5W	P21W	P21W	W5W
4007 (GP_) 02/07 → HALOGEN	H11	H7	H11		PY21W / WY21W		W5W		W21/5W	W21/5W	W21W	W21W	W5W
4007 (GP_) 02/07 → XENON	D2S	H7	H11		PY21W / WY21W		W5W		W21/5W	W21/5W	W21W	W21W	W5W
4008 05/12 → HALOGEN	H7	H11	H11		P21W / WY21W		W5W		P21/5W	P21/5W	W21W	W16W	W5W
4008 05/12 → XENON	D2S	H11	H11		P21W / WY21W		W5W		P21/5W	P21/5W	W21W	W16W	W5W
5008 06/09 → HALOGEN	H7	H7			PY21W / PY21W	WY5W	P21/5W	W5W	P21W	R5W	P21W	P21W	W5W
5008 06/09 → BI-XENON	D1S	D1S			PY21W / PY21W	WY5W	P21/5W	W5W	P21W	R5W	P21W	P21W	W5W
BIPPER (AA_) 02/08 →	H4	H4	H1		PY21W / PY21W	WY5W	W5W	W5W	P21W	P21/4W	P21/4W	P21W	C5W
BIPPER (AA_) 02/08 → VEHICLE TAILGATE	H4	H4	H1		PY21W / PY21W	WY5W	W5W	W5W	W5W	P21/4W	P21/4W	P21W	C5W
BIPPER Tepee 04/08 →	H4	H4	H1		PY21W / PY21W	WY5W	W5W	W5W	P21W	P21/4W	P21/4W	P21W	C5W
BIPPER Tepee 04/08 → VEHICLE TAILGATE	H4	H4	H1		PY21W / PY21W	WY5W	W5W	W5W	W5W	P21/4W	P21/4W	P21W	C5W
BOXER Box (230L) 03/94 → 04/02 DUAL REFLECTOR	H7	H1	H3		PY21W / PY21W	W5W	T4W	P21W	P21W	P21/5W	P21/5W	P21W	W5W
BOXER Box (244) 04/02 → 03/06 DUAL REFLECTOR	H7	H1	H1		PY21W / PY21W	W5W	W5W	P21W	P21W	P21/4W	P21/4W	P21W	W5W
BOXER Box 04/06 → DUAL REFLECTOR	H7	H1	H1		PY21W / PY21W	WY5W	W5W	W5W	P21/5W	P21/5W	P21W	P21W	C5W
BOXER Bus (230P) 03/94 → 04/02 SINGLE REFLECTOR	H4	H4	H3		PY21W / PY21W	W5W	T4W	W5W	P21W	P21/4W	P21/4W	P21W	W5W
BOXER Bus (244, Z_) 04/02 → 03/06 DUAL REFLECTOR	H7	H1	H1		PY21W / PY21W	W5W	W5W	P21W	P21W	P21/4W	P21/4W	P21W	W5W
BOXER Bus 04/06 → DUAL REFLECTOR	H7	H1	H1		PY21W / PY21W	WY5W	W5W	W5W	P21/5W	P21/5W	P21W	P21W	C5W
BOXER Platform/Carrier (ZCT_) 03/94 → 04/02 SINGLE REFLECTOR	H4	H4	H3		P21W/ PY21W	W5W	T4W	W5W	P21W	R5W	P21W	P21W	R5W
BOXER Platform/Carrier (244) 12/01 → DUAL REFLECTOR	H7	H1	H1		PY21W / PY21W	W5W	W5W		P21W	P21/4W	P21/4W	P21W	R5W

BOXER Platform/Carrier 04/06 → DUAL REFLECTOR	H7	H1	H1		PY21W / PY21W	W16W	W5W	W5W	P21/5W	P21/5W	P21W	P21W	C5W
EXPERT (224) 12/95 →	H4	H4	H3		P21W / P21W	W5W/ WY5W	W5W	P21W	P21/5W	P21/5W	P21W	P21W	W5W
EXPERT Box (222) 07/95 →	H4	H4	H3		P21W / P21W	W5W/ WY5W	W5W	P21W	P21/5W	P21/5W	P21W	P21W	W5W
EXPERT Box (VF3A_, VF3U_, VF3X_) 01/07 →	H4	H4	H1		PY21W / PY21W	WY5W	W5W		P21/5W	P21/5W	P21W	P21W	W5W
EXPERT Platform/Carrier (223) 12/95 →	H4	H4	H3		P21W/ P21W	W5W/ WY5W	W5W	P21W	P21W	R5W	P21W	P21W	R5W
EXPERT Platform/Carrier 01/07 →	H4	H4	H1		PY21W / PY21W	WY5W	W5W		P21W	R5W	P21W	P21W	W5W
EXPERT Tepee (VF3V_) 01/07 →	H4	H4	H1		PY21W / PY21W	WY5W	W5W		P21/5W	P21/5W	P21W	P21W	W5W
ION 11/10 →	H11	HB3	H8		WY21W / W21W	WY5W	W5W	W5W	LED	LED	W21W	W21W	W5W
PARTNER Combispace (5F) 05/96 →	H4	H4	H1 / H11		PY21W / PY21W	W5W/ WY5W	W5W	W5W	P21/5W	P21/5W	P21W	P21W	W5W
PARTNER Box (5) 04/96 →	H4	H4	H1		PY21W / PY21W	W5W/ WY5W	W5W	W5W	P21/5W	P21/5W	P21W	P21W	W5W
PARTNER 01/02 → DUAL REFLECTOR	H7	H7	H3		PY21W / PY21W	WY5W	W5W	W16W	P21/5W	P21/5W	P21W	P21W	W5W
PARTNER Box 04/08 →	H4	H4	H1		P21W / PY21W	WY5W	W5W	W16W	P21/5W	P21/5W	P21W	P21W	W5W
PARTNER Platform/Carrier 01/09 →	H4	H4	H1		P21W / PY21W	WY5W	W5W		P21W	R5W	P21W	P21W	C5W
PARTNER Tepee 04/08 →	H4	H4	H1		PY21W / PY21W	WY5W	W5W	W16W	P21/5W	P21/5W	P21W	P21W	W5W
PARTNER Tepee 04/08 → VEHICLE TAILGATE	H4	H4	H1		PY21W / PY21W	WY5W	W5W	W16W	W16W	P21/5W	P21W	P21W	W5W
RCZ 03/10 → HALOGEN	H7	H1	H8	P21/5W	PY21W / PY21W	W5W	P21/5W		LED	LED	H21W	W16W	W5W
RCZ 03/10 → BI-XENON	D1S	D1S	H8	LED	PY21W / PY21W	W5W	P21/5W		LED	LED	H21W	W16W	
PORSCHE													
911 (993) 10/93 → 09/97	H1	H1	H3		P21W / P21W	W5W	T4W		P21/5W	P21/5W	P21W	P21W	C5W
911 (993) 10/93 → 09/97 XENON	D2S	H1	H3		P21W / P21W	W5W	T4W		P21/5W	P21/5W	P21W	P21W	C5W
911 (993) Convertible, Targa 01/94 → 09/97	H1	H1	H3		P21W / P21W	W5W	T4W		P21/5W	P21/5W	P21W	P21W	C5W
911 (993) Convertible, Targa 01/94 → 09/97 XENON	D2S	H1	H3		P21W / P21W	W5W	T4W		P21/5W	P21/5W	P21W	P21W	C5W
911 (996) 09/97 → 12/01	H7	H7	H7		PY21W / PY21W	W5W / WY5W	W5W		P21W	R5W	P21W	P21W	C5W
911 (996) 09/97 → 12/01 XENON	D2S	H7	H7		PY21W / PY21W	W5W / WY5W	W5W		P21W	R5W	P21W	P21W	C5W
911 (996) 09/97 → 12/01 BI-XENON	D2S	D2S	H7		PY21W / PY21W	W5W / WY5W	W5W		P21W	R5W	P21W	P21W	C5W
911 (996) 12/01 →	H1	H9	H3		PY21W / PY21W	W5W / WY5W	H6W		P21W	R5W	P21W	P21W	C5W
911 (996) 09/97 → 12/01 XENON	D2S	H7	H7		PY21W / PY21W	W5W / WY5W	W5W		P21W	R5W	P21W	P21W	C5W
911 (996) 09/97 → 12/01 BI-XENON	D2S	D2S	H7		PY21W / PY21W	W5W / WY5W	W5W		P21W	R5W	P21W	P21W	C5W
911 (996) Convertible 02/98 → 08/05	H7	H7	H3		PY21W / PY21W	W5W / WY5W	W5W / H6W	W3W	P21W	R5W	P21W	P21W	C5W
911 (996) Convertible 02/98 → 08/05 XENON	D2S	H9 / H11	H7		PY21W / PY21W	W5W / WY5W	W5W / H6W	W3W	P21W	R5W	P21W	P21W	C5W
911 (996) Convertible 02/98 → 08/05 BI-XENON	D2S	D2S	H7		PY21W / PY21W	W5W / WY5W	W5W / H6W	W3W	P21W	R5W	P21W	P21W	C5W
911 (996) Targa 12/01 → 08/05	H7	H9 / H11	H3		PY21W / PY21W	WY5W	H6W	W3W	P21W	R5W	P21W	P21W	C5W
911 (996) Targa 12/01 → 08/05 XENON			H3		PY21W / PY21W	WY5W	H6W	W3W	P21W	R5W	P21W	P21W	C5W
911 (996) Targa 12/01 → 08/05 BI-XENON	D2S	D2S	H3		PY21W / PY21W	WY5W	H6W	W3W	P21W	R5W	P21W	P21W	C5W
911 (997) 07/04 → STOP-/TAILLIGHT	H7	H9	H8		PY21W / PY21W	WY5W	W5W		P21/5W	P21/5W	P21/4W	P21W	C5W
911 (997) 07/04 → FOG-/TAILLIGHT	H7	H9	H8		PY21W / PY21W	WY5W	W5W		P21/5W	P21/4W	P21/4W	P21W	C5W
911 Targa (997) 07/06 →	H7	H9 / H11	H8		PY21W / PY21W	WY5W	W5W		P21/4W	P21/4W	P21/4W	P21W	C5W
911 Targa (997) 07/06 → BI-XENON	D2S	D2S	H8		PY21W / PY21W	WY5W	W5W		P21/4W	P21/4W	P21/4W	P21W	C5W
911 (991) 12/11 → BI-XENON	D3S	D3S			LED / LED	WY5W	LED		LED	LED	LED	LED	LED
911 (991) Convertible 03/12 → BI-XENON	D3S	D3S			LED / LED	WY5W	LED		LED	LED	LED	LED	LED
911 (991) Targa 05/14 → BI-XENON	D3S	D3S			LED / LED	WY5W	LED		LED	LED	LED	LED	LED
928, S4 01/87 → 11/95	H4	H4	H3		P21W / PY21W	WY5W / T4W	T4W		P21/5W	P21/4W	P21/4W	P21W	C5W
968 06/91 → 11/95 STOP-/TAILLIGHT	H4	H4	H3		P21W / P21W	W5W	W5W		P21/5W	P21/5W	P21W	P21W	C5W
968 06/91 → 11/95 TAILLIGHT	H4	H4	H3		P21W / P21W	W5W	W5W		P21/5W	R5W	P21W	P21W	C5W
BOXSTER (981) 04/12 →	H7	H9				WY5W	LED		LED	LED	LED	LED	LED
BOXSTER (981) 04/12 → BI-XENON	D3S	D3S				WY5W	LED		LED	LED	LED	LED	LED

BOXSTER (986) 09/96 → 12/04	H7	H7	H7		P21W / P21W	W5W	W5W	W5W	P21W	R5W	P21W	P21W	C5W
BOXSTER (986) 09/96 → 12/04 XENON	D2S	H7	H7		P21W / P21W	W5W	W5W	W5W	P21W	R5W	P21W	P21W	C5W
BOXSTER (987) 11/04 → 12/11	H7	H9 / H11	H8		P21W / PY21W	LED	W5W		P21/5W	P21/4W	P21/4W	P21W	C5W
BOXSTER (987) 11/04 → 12/11 XENON	D2S	H9 / H11	H8		P21W / PY21W	LED	W5W		P21/5W	P21/4W	P21/4W	P21W	C5W
CARRERA GT 07/03 → 12/06	D2S	HB3	LED		LED / LED	LED	LED		LED	LED	P21W	P21W	C5W
CAYENNE (955) 09/02 → 09/10 STOP-/TAILLIGHT	H7	H7	H11		P21W / PY21W	W5W	W5W		P21/5W	P21/5W	P21/4W	P21W	C5W
CAYENNE (955) 09/02 → 09/10 FOG-/TAILLIGHT	H7	H7	H11		P21W / PY21W	W5W	W5W		P21/5W	P21/4W	P21/4W	P21W	C5W
CAYENNE (955) 09/02 → 09/10 XENON STOP-/TAILLIGHT	D1S	H7	H11		P21W / PY21W	W5W	W5W		P21/5W	P21/4W	P21/4W	P21W	C5W
CAYENNE (955) 09/02 → 09/10 XENON FOG-/TAILLIGHT	D1S	H7	H11		P21W / PY21W	W5W	W5W		P21/5W	P21/4W	P21/4W	P21W	C5W
CAYENNE (955) 09/02 → 09/10 BI-XENON STOP-/TAILLIGHT	D1S	D1S	H11		P21W / PY21W	W5W	W5W		P21/5W	P21/4W	P21/4W	P21W	C5W
CAYENNE (955) 09/02 → 09/10 BI-XENON FOG-/TAILLIGHT	D1S	D1S	H11		P21W / PY21W	W5W	W5W		P21/5W	P21/4W	P21/4W	P21W	C5W
CAYENNE 06/10 →	H7	H7	H11		LED / LED	WY5W	LED		LED	LED	LED	LED	W5W
CAYENNE 06/10 → XENON	D1S	H7	H11		LED / LED	WY5W	LED		LED	LED	LED	LED	W5W
CAYMAN (981) 04/12 →	H7	H9				WY5W	LED		LED	LED	LED	LED	LED
CAYMAN (981) 04/12 → BI-XENON	D3S	D3S				WY5W	LED		LED	LED	LED	LED	LED
CAYMAN (987) 11/05 →	H7	H9 / H11	H11		P21W / PY21W	LED	H6W		LED	P21/5W	P21/5W	P21W	C5W
CAYMAN (987) 11/05 → XENON	D2S	H9 / H11	H11		P21W / PY21W	LED	H6W		LED	P21/5W	P21/5W	P21W	C5W
MACAN 02/14 →	H7	H15	H11	H15	LED / LED		LED		LED	LED	LED	LED	LED
MACAN 02/14 → BI-XENON	D3S	D3S	H11		LED / LED		LED		LED	LED	LED	LED	LED
Panamera 09/09 →	D1S	H7			LED / LED	WY5W	LED		LED	LED	LED	LED	C5W
RENAULT													
19 II Chamade (L53_) 04/92 → 08/03	H4	H4	H1		PY21W / PY21W	-	W5W		P21/5W	P21/5W	P21W	P21W	C5W
19 II Convertible (D53_, 853_) 04/92 → 02/97	H4	H4	-		P21W / P21W	-	W3W		P21/5W	P21/5W	P21W	P21W	C5W
AVANTIME 09/01 → 05/03 TAIL/STOPLIGHT	H7	H7	H3		PY21W / PY21W	W5W	W5W		P21/5W	P21/5W	P21W	P21W	W5W
AVANTIME 09/01 → 05/03 STOPLIGHT	H7	H7	H3		PY21W / PY21W	W5W	W5W		P21/5W	R5W	P21W	P21W	W5W
AVANTIME 09/01 → 05/03 XENON TAIL/STOPLIGHT	D2S	H7	H3		PY21W / PY21W	W5W	W5W	W16W	P21/5W	P21/5W	P21W	P21W	W5W
AVANTIME 09/01 → 05/03 XENON STOPLIGHT	D2S	H7	H3		PY21W / PY21W	W5W	W5W		P21/5W	R5W	P21W	P21W	W5W
CAPTEUR 06/13 →	H1	H1	H11	LED	PY21W / PY21W		W5W		P21/5W	P21/5W	P21W		W5W
CLIO I (B/C57_, 5/357_) 05/90 → 09/98	H4	H4	H1		P21W / PY21W	W5W	R5W		P21/5W	P21/5W	P21W	P21W	C5W
CLIO I Box (S57_) 01/91 → 09/98	H4	H4			P21W / PY21W	W5W	R5W		P21/5W	P21/5W	P21W	P21W	C5W
CLIO II (BB0/1/2_, CB0/1/2_) 09/98 → 05/01 SINGLE REFLECTOR	H4	H4	H1		P21W / PY21W	W5W	W5W		P21/5W	P21/5W	P21W	P21W	C5W
CLIO II (BB0/1/2_, CB0/1/2_) 06/01 → SINGLE REFLECTOR	H4	H4	H11		PY21W / PY21W	W5W	W5W		P21/5W	P21/5W	P21W	P21W	C5W
CLIO II (BB0/1/2_, CB0/1/2_) 09/98 → 05/01 DUAL REFLECTOR	H7	HB3	H1		P21W / PY21W	W5W	W5W		P21/5W	P21/5W	P21W	P21W	C5W
CLIO II (BB0/1/2_, CB0/1/2_) 06/01 → DUAL REFLECTOR	H7	H1	H11		PY21W / PY21W	W5W	W5W		P21/5W	P21/5W	P21W	P21W	C5W
CLIO II (BB0/1/2_, CB0/1/2_) 09/98 → 05/01 XENON	D2S	H7	H11		P21W / PY21W	W5W	W5W		P21/5W	P21/5W	P21W	P21W	C5W
CLIO II (BB0/1/2_, CB0/1/2_) 06/01 → XENON	D2S	H7	H11		PY21W / PY21W	W5W	W5W		P21/5W	P21/5W	P21W	P21W	C5W
CLIO II Box (SB0/1/2_) 09/98 → 05/01 SINGLE REFLECTOR	H4	H4	H1		P21W / PY21W	W5W	W5W		P21/5W	P21/5W	P21W	P21W	C5W
CLIO II Box (SB0/1/2_) 09/98 → SINGLE REFLECTOR	H4	H4	H11		PY21W / PY21W	W5W	W5W		P21/5W	P21/5W	P21W	P21W	C5W
CLIO II Box (SB0/1/2_) 09/98 → 05/01 DUAL REFLECTOR	H7	HB3	H1		P21W / PY21W	W5W	W5W		P21/5W	P21/5W	P21W	P21W	C5W
CLIO II Box (SB0/1/2_) 09/98 → DUAL REFLECTOR	H7	H1	H11		PY21W / PY21W	W5W	W5W		P21/5W	P21/5W	P21W	P21W	C5W
CLIO II Box (SB0/1/2_) 09/98 → 05/07 XENON	D2S	H7	H11		P21W / PY21W	W5W	W5W		P21/5W	P21/5W	P21W	P21W	C5W
CLIO II Box (SB0/1/2_) 06/01 → XENON	D2S	H7	H11		PY21W / PY21W	W5W	W5W		P21/5W	P21/5W	P21W	P21W	C5W
CLIO III (BR0/1, CR0/1) 05/05 →	H7	H1	H11		PY21W / PY21W	W5W	W5W		P21/5W	P21/5W	P21W	P21W	C5W
CLIO III (BR0/1, CR0/1) 05/05 → XENON	D2S	H7	H11		PY21W / PY21W	W5W	W5W		P21/5W	P21/5W	P21W	P21W	C5W
CLIO IV 11/12 →	H7	H1			PY21W	W5W	W5W		P21/5W	P21/5W	H21W	H21W	W5W
CLIO Grandtour (KR0/1_) 02/08 →	H7	H1	H11		PY21W / PY21W	W5W	W5W	W5W	P21/5W	P21/5W	P21W	P21W	C5W

CLIO Grandtour (KR0/1_) 02/08 → XENON	D1S/ D2S	H7	H11		PY21W / PY21W	W5W	W5W	W5W	P21/5W	P21/5W	P21W	P21W	C5W
CLIO Grandtour IV 01/13 →	H7	H1		LED	PY21W	W5W	W5W		P21/5W	P21/5W	H21W	H21W	W5W
ESPACE II (J/S63_) 01/91 → 12/96	H4	H4	H1		P21W / P21W	-	R5W		P21/5W	P21/5W	P21W	P21W	C5W
ESPACE III (JE0_) 11/96 → 10/02	H7	H7	H1		PY21W / PY21W	W5W	W5W		P21/5W	P21/5W	P21W	P21W	W5W
ESPACE III (JE0_) 11/96 → 06/00 XENON	D2S	H1	H1		PY21W / PY21W	W5W	W5W		P21/5W	P21/5W	P21W	P21W	W5W
ESPACE III (JE0_) 07/00 → XENON	D2S	H7	H1		PY21W / PY21W	W5W	W5W		P21/5W	P21/5W	P21W	P21W	W5W
ESPACE IV (JK0/1_) 11/02 →	H7	H3	H11		PY21W / PY21W	W5W	W5W	W16W	P21/5W	P21/5W	P21W	P21W	W5W
ESPACE IV (JK0/1_) 11/02 → XENON	D2S	H1	H11		PY21W / PY21W	W5W	W5W	W16W	P21/5W	P21/5W	P21W	P21W	W5W
ESPACE V 02/15 →	LED	LED			LED / P21W	-	LED					W16W	W5W
FLUENCE (L30_) 02/10 →	H7	H7	H11		PY21W / PY21W	W5W	W5W		P21/5W	P21/5W	P21W	W16W	W5W
FLUENCE (L30_) 02/10 → XENON	D1S	H7	H11		PY21W / PY21W	W5W	W5W		P21/5W	P21/5W	P21W	W16W	W5W
GRAND SCÉNIC II (JM0/1_) 04/04 → 07/06	H7	H1	H11		PY21W / PY21W	W5W	W5W		P21/5W	P21/5W	P21W	P21W	C5W
GRAND SCÉNIC II (JM0/1_) 08/06 →	H7	H1	H11		PY21W / PY21W	W5W	H6W		P21/5W	P21W	P21W	P21W	C5W
GRAND SCÉNIC II (JM0/1_) 04/04 → XENON	D2S	H7	H11		PY21W / PY21W	W5W	W5W		P21/5W	P21/5W	P21W	P21W	C5W
GRAND SCÉNIC III (JZ0/1_) 02/09 →	H7	H7	H11 / H16		PY21W / PY21W	WY5W	W5W	W5W	P21/5W	P21/5W	P21W	P21W	W5W
GRAND SCÉNIC III (JZ0/1_) 02/09 → BI-XENON	D1S	D1S	H11 / H16		PY21W / PY21W	WY5W	W5W	W5W	P21/5W	P21/5W	P21W	P21W	W5W
KANGOO (KC0/1_) 08/97 →	H4	H4	H1		P21W / PY21W	W5W	W5W	P21W	P21/5W	P21/5W	P21W	P21W	W5W
KANGOO (KC0/1_) 08/97 →	H4	H4	H1		P21W / PY21W	W5W	W5W	P21W	P21/5W	P21/5W	P21W	P21W	W5W
KANGOO (KW0/1_) 02/08 →	H4	H4	-		PY21W / PY21W	WY5W	P21/5W	W16W	P21W	P21/5W	P21W	P21W	W5W
KANGOO BE BOP (KW0/1_) 02/09 →	H4	H4	-		PY21W / PY21W	WY5W	P21/5W	W16W	P21W	P21/5W	P21W	P21W	W5W
KANGOO Express (FW0/1_) 02/08 →	H4	H4			PY21W / PY21W	WY5W	P21/5W	W16W	P21W	P21/5W	P21W	P21W	W5W
KOLEOS (HY_) 09/08 →	H7	H7	H11		PY21W / PY21W	WY5W	W5W	W5W	P21W	W5W	P21W	P21W	W5W
KOLEOS (HY_) 09/08 → XENON	D2S	H7	H11		PY21W / PY21W	WY5W	W5W		P21W	W5W	P21W	P21W	W5W
LAGUNA I (B56_, 556_) 11/93 → 04/98	H1	H1	H1		PY21W / PY21W	W5W	W5W		P21/5W	P21/5W	P21W	P21W	W5W
LAGUNA I (B56_, 556_) 05/98 → 03/01	H7	H7	H1		PY21W / PY21W	W5W	W5W		P21/5W	P21/5W	P21W	P21W	W5W
LAGUNA II (BG0/1_) 03/01 →	H7	H1	H11		PY21W / PY21W	WY5W	W5W	W16W	P21/5W	P21/5W	P21W	P21W	C5W
LAGUNA II (BG0/1_) 03/01 → XENON	D2R	H1	H11		PY21W / PY21W	WY5W	W5W		P21/5W	P21/5W	P21W	P21W	C5W
LAGUNA II Grandtour (KG0/1_) 03/01 →	H7	H1	H11		PY21W / PY21W	W5W	W5W		P21/5W	P21/5W	P21W	P21W	W5W
LAGUNA II Grandtour (KG0/1_) 03/01 → XENON	D2R	H1	H11		PY21W / PY21W	W5W	W5W		P21/5W	P21/5W	P21W	P21W	W5W
LAGUNA Coupe (DT0/1) 09/08 →	H7	H7	H11		PY21W / PY21W	WY5W	W5W		P21W	P21/5W	P21W	P21W	W5W
LAGUNA Coupe (DT0/1) 09/08 → BI-XENON	D1S	D1S	H11		PY21W / PY21W	WY5W	W5W		P21W	P21/5W	P21W	P21W	W5W
LAGUNA Grandtour (K56_) 09/95 → 04/98	H1	H1	H1		PY21W / P21W	W5W	W5W		P21/5W	P21/5W	P21W	P21W	W5W
LAGUNA Grandtour (K56_) 05/98 → 03/01	H7	H7	H1		PY21W / P21W	W5W	W5W		P21/5W	P21/5W	P21W	P21W	W5W
LAGUNA III (BT0/1) 10/07 →	H7	H7	H11		PY21W / PY21W	WY5W	W5W		P21/5W	P21/5W	P21W	W16W	W5W
LAGUNA III (BT0/1) 10/07 → XENON	D1S	H7	H11		PY21W / PY21W	WY5W	W5W		P21/5W	P21/5W	P21W	W16W	W5W
LAGUNA III Grandtour (KT0/1) 10/07 →	H7	H7	H11		PY21W / PY21W	WY5W	W5W		P21/5W	P21/5W	P21W	W16W	W5W
LAGUNA III Grandtour (KT0/1) 10/07 → XENON	D1S	H7	H11		PY21W / PY21W	WY5W	W5W		P21/5W	P21/5W	P21W	W16W	W5W
LATITUDE (L70_) 02/11 →	H7	H1	H11 / H16		/ PY21W	WY5W	W5W		LED	LED	P21W	W16W	W5W
LATITUDE (L70_) 02/11 → XENON	D1S	H1	H11 / H16		/ PY21W	WY5W	W5W		LED	LED	P21W	W16W	W5W
LOGAN I (LS_) 09/04 →	H4	H4	H11		PY21W / P21W	WY5W	W5W	P21W	P21W	P21/5W	P21W	P21W	W5W
LOGAN I Estate (KS_) 04/07 →	H4	H4	H11		PY21W / P21W	WY5W	W5W		P21W	P21/5W	P21W	P21W	W5W
LOGAN II 10/13 →	H7	H1	H16		PY21W / PY21W	WY5W	W5W	W16W	P21/5W	P21/5W	P21W	P21W	W5W
Master I Box/Bus (T_) 08/80 → 07/98	R2	R2	H1		P21W / P21/5W	-	T4W		P21/5W	P21/5W	P21W	P21W	R5W
Master I Box/Bus (T_) 08/80 → 07/98 HALOGEN	H4	H4	H1		P21W / P21/5W	-	T4W		P21/5W	P21/5W	P21W	P21W	R5W
MASTER II Box/Bus (FD, JD) 03/98 → SINGLE REFLECTOR	H4	H4	H1		PY21W / P21W	W5W / WY5W	W5W	P21W	P21/5W	P21/5W	P21W	P21W	C5W
MASTER II Box/Bus (FD, JD) 03/98 → DUAL REFLECTOR	H7	H1	H1		PY21W / P21W	W5W / WY5W	W5W	P21W	P21/5W	P21/5W	P21W	P21W	C5W

MASTER II Platform/Carrier (ED/HD/UD) 07/98 → SINGLE REFLECTOR	H4	H4	H1		PY21W / P21W	W5W / WY5W	W5W		P21/5W	P21/5W	P21W	P21W	R10W
MASTER II Platform/Carrier (ED/HD/UD) 07/98 → DUAL REFLECTOR	H7	H1	H1		PY21W / P21W	W5W / WY5W	W5W		P21/5W	P21/5W	P21W	P21W	R10W
MASTER III Box/Bus (FV, JV) 02/10 →	H7	H1	H11	P21W	PY21W / PY21W	WY5W	W5W	W5W	P21/5W	P21/5W	P21W	P21W	W5W
MASTER III Platform/Carrier (EV, HV, UV) 02/10 →	H7	H1	H11	P21W	PY21W / P21W	-	W5W		P21W	P21/5W	P21W	P21W	W5W
MEGANE I (BA0/1_) 08/95 → 08/03 SINGLE REFLECTOR	H4	H4	H1		P21W / PY21W	W5W	W5W	W16W	P21/5W	P21/5W	P21W	P21W	C5W
MEGANE I (BA0/1_) 08/95 → 08/03 DUAL REFLECTOR	H7	H1	H1		P21W / PY21W	W5W	W5W	W16W	P21/5W	P21/5W	P21W	P21W	C5W
MEGANE I Classic (LA0/1_) 09/96 → 08/03 SINGLE REFLECTOR	H4	H4	H1		P21W / PY21W	W5W	W5W		P21/5W	P21/5W	P21W	P21W	C5W
MEGANE I Classic (LA0/1_) 09/96 → 08/03 DUAL REFLECTOR	H7	H1	H1		P21W / PY21W	W5W	W5W		P21/5W	P21/5W	P21W	P21W	C5W
MEGANE I Coach (DA0/1_) 03/96 → 08/03 SINGLE REFLECTOR	H4	H4	H1		P21W / PY21W	W5W	W5W		P21/5W	P21/5W	P21W	P21W	C5W
MEGANE I Coach (DA0/1_) 03/96 → 08/03 DUAL REFLECTOR	H7	H1	H1		P21W / PY21W	W5W	W5W		P21/5W	P21/5W	P21W	P21W	C5W
MEGANE I Convertible (EA0/1_) 10/96 → 08/03 SINGLE REFLECTOR	H4	H4	H1		P21W / PY21W	W5W	W5W		P21/5W	P21/5W	P21W	P21W	C5W
MEGANE I Convertible (EA0/1_) 10/96 → 08/03 DUAL REFLECTOR	H7	H1	H1		P21W / PY21W	W5W	W5W		P21/5W	P21/5W	P21W	P21W	C5W
MEGANE I Grandtour (KA0/1_) 03/99 → 08/03	H7	H7	H1		P21W / PY21W	W5W	W5W		P21/5W	P21/5W	P21W	P21W	C5W
MEGANE II (BM0/1_, CM0/1_) 11/02 →	H7	H1	H11		PY21W / PY21W	W5W	W5W		P21/5W	P21/5W	P21W	P21W	C5W
MEGANE II (BM0/1_, CM0/1_) 11/02 → XENON	D2S	H7	H11		PY21W / PY21W	W5W	W5W		P21/5W	P21/5W	P21W	P21W	C5W
MEGANE II Coupé-Convertible (EM0/1_) 09/03 →	H7	H1	H11		PY21W / PY21W	W5W	W5W		P21/5W	P21/5W	P21W	P21W	C5W
MEGANE II Coupé-Convertible (EM0/1_) 09/03 → XENON	D2S	H7	H11		PY21W / PY21W	W5W	W5W		P21/5W	P21/5W	P21W	P21W	C5W
MEGANE II Estate (KM0/1_) 08/03 →	H7	H1	H11		PY21W / PY21W	W5W	W5W		P21/5W	P21/5W	P21W	P21W	C5W
MEGANE II Estate (KM0/1_) 08/03 → XENON	D2S	H7	H11		PY21W / PY21W	W5W	W5W		P21/5W	P21/5W	P21W	P21W	C5W
MEGANE II Hatchback (LM0/1_) 09/03 →	H7	H1	H11		PY21W / PY21W	W5W	W5W		P21/5W	P21/5W	P21W	P21W	C5W
MEGANE II Hatchback (LM0/1_) 09/03 → XENON	D2S	H7	H11		PY21W / PY21W	W5W	W5W		P21/5W	P21/5W	P21W	P21W	C5W
MEGANE III Coupe (DZ0/1_) 11/08 →	H7	H7	H11 / H16		PY21W / PY21W	WY5W	W5W		P21/5W	P21/5W	P21W	P21W	W5W
MEGANE III Coupe (DZ0/1_) 11/08 → XENON	D2S	H7	H11 / H16		PY21W / PY21W	WY5W	W5W		P21/5W	P21/5W	P21W	P21W	W5W
MEGANE III Grandtour (KZ0/1) 11/08 →	H7	H7	H11 / H16		PY21W / PY21W	W5W	W5W		P21/5W	P21/5W	P21W	P21W	W5W
MEGANE III Grandtour (KZ0/1) 11/08 → XENON	D2S	H7	H11 / H16		PY21W / PY21W	W5W	W5W		P21/5W	P21/5W	P21W	P21W	W5W
MEGANE III Hatchback 06/09 →	H7	H7	H11 / H16		PY21W / PY21W	WY5W	W5W		P21/5W	P21/5W	P21W	W16W	W5W
MEGANE III Hatchback 06/09 → XENON	D1S	H7	H11 / H16		PY21W / PY21W	WY5W	W5W		P21/5W	P21/5W	P21W	W16W	W5W
MEGANE III Notchback (BZ0_) 11/08 →	H7	H7	H11		PY21W / PY21W	WY5W	W5W		P21/5W	P21/5W	P21W	W16W	W5W
MEGANE III Notchback (BZ0_) 11/08 → XENON	D2S	H7	H11		PY21W / PY21W	WY5W	W5W		P21/5W	P21/5W	P21W	W16W	W5W
MEGANE Scenic (JA0/1_) 01/97 → 10/99 SINGLE REFLECTOR	H4	H4	H1		P21W / PY21W	W5W	W5W		P21/5W	P21/5W	P21W	P21W	C5W
MEGANE Scenic (JA0/1_) 01/97 → 10/99 DUAL REFLECTOR	H7	H1	H1		P21W / PY21W	W5W	W5W		P21/5W	P21/5W	P21W	P21W	C5W
MEGANE CC (EZ0/1_) 06/10 →	H7	H7	LED		PY21W / PY21W	WY5W	W5W		LED	LED	P21W	P21W	W5W
MEGANE CC (EZ0/1_) 06/10 →	D1S	H7	LED		PY21W / PY21W	WY5W	W5W		LED	LED	P21W	P21W	W5W
MODUS (F/JP0_) 09/04 →	H7	H1	H11		P21W / P21W	W5W	W5W	W16W	P21/5W	P21/5W	P21W	P21W	W5W
MODUS (F/JP0_) 09/04 → XENON	D2S	H1	H11		P21W / P21W	W5W	W5W	W16W	P21/5W	P21/5W	P21W	P21W	W5W
SAFRANE I (B54_) 04/92 → 07/96	H1	H1	H1		P21W / P21W	W5W	W5W		P21/5W	P21/5W	P21W	P21W	W5W
SAFRANE II (B54_) 07/96 → 12/00	H1	H1	H1		PY21W / PY21W	W5W	W5W		P21/5W	P21/5W	P21W	P21W	W5W
SAFRANE I (B54_) 07/96 → 12/00 XENON	D1S	H7	H7		PY21W / PY21W	W5W	W5W		P21/5W	P21/5W	P21W	P21W	W5W
SANDERO/STEPWAY 02/09 →	H4	H4	H11		PY21W / PY21W	W5W	W5W	W16W	P21/5W	P21/5W	P21W	P21W	W5W
SCÉNIC → 08/99	H4	H4			PY21W / PY21W		W5W		P21/5W	P21/5W	P21W	P21W	C5W
SCÉNIC I (JA0/1_) 09/99 → 08/03	H7	H1	H1		PY21W / PY21W	W5W	W5W		P21/5W	P21/5W	P21W	P21W	C5W
SCÉNIC II (JM0/1_) 06/03 → 07/06	H7	H1	H11		PY21W / PY21W	W5W	W5W		P21/5W	P21/5W	P21W	P21W	C5W
SCÉNIC II (JM0/1_) 06/03 → 07/06 XENON	D2S	H7	H11		PY21W / PY21W	W5W	W5W		P21/5W	P21/5W	P21W	P21W	C5W
SCÉNIC II (JM0/1_) 08/06 →	H7	H1	H11		PY21W / PY21W	W5W	H6W		P21/5W	P21/5W	P21W	P21W	C5W
SCÉNIC III (JZ0/1_) 02/09 →	H7	H7	H11 / H16		PY21W / PY21W	WY5W	W5W	W5W	P21/5W	P21/5W	P21W	P21W	W5W
SCÉNIC III (JZ0/1_) 02/09 → BI-XENON	D1S	D1S	H11 / H16		PY21W / PY21W	WY5W	W5W	W5W	P21/5W	P21/5W	P21W	P21W	W5W

SPORT SPIDER (EF0_) 03/95 → 10/99	H1	H1	H2		P21W / PY21W	W5W	R5W		P21/5W	P21/5W	P21W	P21W	C5W
THALIA (LB0/1/2_) 02/98 → 05/01 SINGLE REFLECTOR	H4	H4	H1		P21W / PY21W	W5W / WY5W	W5W		P21W	R5W	P21W	P21W	C5W
THALIA (LB0/1/2_) 02/98 → 05/01 DUAL REFLECTOR	H7	HB3	H1		P21W / PY21W	W5W / WY5W	W5W		P21W	R5W	P21W	P21W	C5W
THALIA (LB0/1/2_) 06/01 → DUAL REFLECTOR	H7	H7	H11		P21W / PY21W	W5W / WY5W	W5W		P21/5W	W5W	P21W	P21W	C5W
THALIA II (LU1/2_) 09/08 →	H4	H4	H11		PY21W / PY21W	WY5W	W5W	P21W	P21/5W	P21/5W	P21W	P21W	W5W
TRAFIC Box/Bus (TXX, TXW) 05/89 → 03/01	H4	H4	H3		P21W / P21W	W5W	W5W		P21/5W	P21/5W	P21W	P21W	W5W
TRAFIC Platform/Carrier (PXX) 03/89 → 03/01	H4	H4	H3		P21W / P21W	W5W / R5W	W5W		P21/5W	P21/5W	P21W	P21W	R5W
TRAFIC II Box/Bus (JL, FL) 03/01 →	H4	H4	H1		P21W / P21W	W5W	W5W		P21/5W	P21/5W	P21W	P21W	W5W
TRAFIC II Platform/Carrier (EL) 03/01 →	H4	H4	H1		P21W / PY21W	W5W	W5W		P21/5W	P21/5W	P21W	P21W	W5W
TRAFIC III Box/Bus 05/14 →	H4	H4	H11 / H16		PY21W / PY21W	WY5W	W21/5W / LED	P21W	P21/5W	P21/5W	W16W	W16W	W5W
TWINGO I (C06_) 03/93 →	H4	H4	H1		P21W / PY21W	W5W	W5W	W16W	P21/5W	P21/5W	P21W	P21W	C5W
TWINGO I Box (S06_) 03/93 →	H4	H4	H1		P21W / PY21W	W5W	W5W		P21/5W	P21/5W	P21W	P21W	C5W
TWINGO II (CN0_) 03/07 →	H4	H4			WY21W / WY21W	WY5W	W5W	W16W	P21/5W	P21/5W	P21W	P21W	W5W
TWINGO III 09/14 →	H4	H4	H16		PY21W / PY21W	W5W			P21/5W	P21/5W	P21W	P21W	W5W
TWIZY (MAM_) 04/12 →	H4	H4			P21W / P21W	W5W			P21/5W	P21/5W	P21W	P21W	W5W
VEL SATIS (BJ0_) 06/02 →	H7	H9	H11		PY21W / PY21W	W5W	W5W	W5W	P21/5W	P21/5W	P21W	P21W	C5W
VEL SATIS (BJ0_) 06/02 → XENON	D2S	H9	H11		PY21W / PY21W	W5W	W5W	W5W	P21/5W	P21/5W	P21W	P21W	C5W
WIND (E4M_) 07/10 →	H1	H1	H11		PY21W / PY21W	WY5W	W5W		P21/5W	P21/5W	P21/4W	P21W	W5W
ZOE 06/12 →	H7	H7			PY21W / PY21W							P21W	W5W
ROVER													
25 (RF) 09/99 → 05/05	H7	H1	H1		PY21W / PY21W	WY5W	W5W	W3W	P21W	R10W	P21W	P21W	C5W
45 (RT) 02/00 → 05/05	H7	H1	H1		PY21W / PY21W	WY5W	W5W		P21W	R10W	P21W	P21W	C5W
45 Hatchback (RT) 02/00 → 05/05	H7	H1	H1		PY21W / PY21W	WY5W	W5W		P21W	R10W	P21W	P21W	W5W
75 (RJ) 02/99 → 05/05	H7	H1	H1		P21W / PY21W		W5W		P21W	W5W	P21W	P21W	C5W
75 (RJ) 02/99 → 05/05 XENON	D2S	H1	H1		P21W / PY21W		W5W		P21W	W5W	P21W	P21W	C5W
75 Tourer (RJ) 08/01 → 05/05	H7	H1	H1		P21W / PY21W		W5W		P21W	W5W	P21W	P21W	C5W
75 Tourer (RJ) 08/01 → 05/05 XENON	D2S	H1	H1		P21W / PY21W		W5W		P21W	W5W	P21W	P21W	C5W
100 (METRO) (XP) 11/89 → 12/98	H4	H4			P21W / PY21W	W5W	W5W		P21/5W	P21/5W	P21W	P21W	C5W
100 Convertible (XP) 04/94 → 12/98	H4	H4			P21W / PY21W	W5W	W5W		P21/5W	P21/5W	P21W	P21W	C5W
200 (RF) 11/95 → 03/00	H4	H4	H1		P21W / PY21W	W5W	W5W	W3W	P21W	R10W	P21W	P21W	C5W
200 Coupe (XW) 10/92 → 06/99	H4	H4	H3		P21W / P21W	W5W	W5W		P21W	W5W	P21W	P21W	C5W
200 Hatchback (XW) 10/89 → 10/95	H4	H4	H3		P21W / P21W	W5W	W5W		P21W	W5W	P21W	P21W	C5W
200 (RF) 11/95 → 03/00	H4	H4	H1		P21W / PY21W	W5W	W5W	W3W	P21W	R10W	P21W	P21W	C5W
400 (RT) 05/95 → 03/00	H7	H1	H1		PY21W / PY21W	W5W	W5W		P21W	R10W	P21W	P21W	C5W
400 Hatchback (RT) 05/95 → 03/00	H7	H1	H1		PY21W / PY21W	WY5W	W5W		P21W	R10W	P21W	P21W	C5W
400 Tourer (XW) 09/93 → 11/98	H4	H4	H3		P21W / P21W	W5W	W5W		P21W	W5W	P21W	P21W	C5W
600 (RH) 08/93 → 02/99	H1	H1	H3		P21W / PY21W	W5W	W5W	W5W	P21/5W	P21/5W	P21W	P21W	W5W
800 (XS) 10/86 → 02/99	H4	H4	H3		P21W / PY21W	W5W	W5W	W5W	P21W	R5W	P21W	P21W	C5W
800 Coupe 08/92 → 02/99	H4	H4	H3		P21W / PY21W	W5W	W5W	W5W	P21W	R5W	P21W	P21W	C5W
800 Hatchback (XS) 10/86 → 02/99	H4	H4	H3		P21W / PY21W	W5W	W5W	W5W	P21W	R5W	P21W	P21W	C5W
Convertible (XW) 04/90 → 11/99	H4	H4	H3		P21W / PY21W	W5W	W5W		P21W	R5W	P21W	P21W	C5W
CITYROVER 01/04 → 06/05	H4	H4			PY21W / PY21W	W5W	W5W		P21W	P21/5W	P21W	P21W	
COUPE 03/96 → 11/99	H4	H4	H3		P21W / PY21W	W5W	W5W		P21W	R5W	P21W	P21W	C5W
MINI 01/91 → 11/00	H4	H4	H3		P21W / P21W	W5W	T4W		P21/5W	P21/5W	P21W	P21W	C5W
STREETWISE 08/03 → 05/05	H7	H1	H1		PY21W / PY21W	WY5W	W5W	W3W	P21W	R10W	P21W	P21W	C5W

SAAB													
900 II 07/93 → 02/98 TAIL/STOPLIGHT	H4	H4	H3		PY21W / PY21W	W5W	W5W		P21/5W	P21/5W	P21W	P21W	C5W
900 II 07/93 → 02/98 TAILLIGHT	H4	H4	H3		PY21W / PY21W		W5W		P21/5W	R5W	P21W	P21W	C5W
900 II Convertible 12/93 → 02/98	H4	H4	H3		PY21W / PY21W	W5W	W5W		P21/5W	P21/5W	P21W	P21W	C5W
900 II Coupe 12/93 → 02/98	H4	H4	H3		PY21W / PY21W	W5W	W5W		P21/5W	P21/5W	P21W	P21W	C5W
9000 04/85 → 12/98 SINGLE REFLECTOR	H4	H4			PY21W / P21W	W5W	T4W		P21W	R5W	P21/4W	P21W	C5W
9000 04/85 → 12/98 DUAL REFLECTOR	H1	H1			PY21W / P21W	W5W	T4W		P21W	R5W	P21/4W	P21W	C5W
9000 Notchback (CS) 01/94 → 12/98	H1	H1			P21W / P21W	W5W	T4W		P21W	R5W	P21/4W	P21W	T4W
9-3 (YS3D) 02/98 → 08/03	H4	H4	H1		PY21W / PY21W	W5W	W5W		P21/5W	P21/5W	P21W	P21W	W5W
9-3 (YS3F) 09/02 →	H7	H9	H3		PY21W / PY21W	WY5W	W5W		P21W	P21W	P21W	P21W	C5W
9-3 (YS3F) 09/02 → XENON	D1S / D2S	H7	H3		PY21W / PY21W	WY5W	W5W		P21W	P21W	P21W	P21W	W5W
9-3 Convertible (YS3D) 02/98 → 08/03	H4	H1	H1		PY21W / PY21W	W5W	W5W		P21/5W	P21/5W	P21W	P21W	W5W
9-3 Convertible (YS3F) 08/03 →	H7	H7	H3		PY21W / PY21W	WY5W	W5W		P21/5W	P21/5W	P21W	P21W	R5W
9-3 Convertible (YS3F) 08/03 → XENON	D1S	H7	H3		PY21W / PY21W		W5W		P21W	P21W	P21W	P21W	R5W
9-3 Estate 03/05 →	H7	H9	H3 / H8		PY21W / PY21W	WY5W	W5W		LED	LED	P21W	P21W	C5W/ W5W
9-3 Estate 03/05 → XENON	D2S	H7	H3 / H8		PY21W / PY21W	WY5W	W5W		LED	LED	P21W	P21W	C5W/ W5W
9-3 Estate 03/05 → BI-XENON	D1S	D1S	H3 / H8		PY21W / PY21W	WY5W	W5W		LED	LED	P21W	P21W	C5W/ W5W
9-3X 02/09 →	H7	H9	H8		PY21W / PY21W	WY5W	LED		LED	LED	P21W	P21W	R5W
9-3X 02/09 → XENON	D2S	H7	H8		PY21W / PY21W	WY5W	LED		LED	LED	P21W	P21W	R5W
9-3X 02/09 → BI-XENON	D1S	D1S	H8		PY21W / PY21W	WY5W	LED		LED	LED	P21W	P21W	R5W
9-5 (YS3E) 09/97 →	H7	H7	H1		PY21W / PY21W	WY5W	W5W	W5W	P21/5W	P21/5W	P21W	P21W	W5W
9-5 (YS3G) 05/10 →	H7	H7	H10		H21W / LED		H6W		LED	LED	H21W	H21W	C5W
9-5 (YS3G) 05/10 → XENON	D1S	H7	H10		H21W / LED		H6W		LED	LED	H21W	H21W	C5W
9-5 Estate (YS3E) 10/98 →	H7	H7	H1		PY21W / LED	WY5W	W5W		P21/5W	P21/5W	P21W	P21W	W5W
9-5 Estate (YS3E) 10/98 → BI-XENON	D1S	D1S	H1		PY21W / LED	WY5W	W5W		P21/5W	P21/5W	P21W	P21W	W5W
SEAT													
ALHAMBRA (7V8, 7V9) 04/96 → 12/00 TAIL/STOPLIGHT	H4	H4	H1		P21W / PY21W	W5W/ WY5W	W5W	W5W	P21/5W	P21/5W	P21W	P21W	W5W
ALHAMBRA (7V8, 7V9) 04/96 → 12/00 TAILLIGHT	H4	H4	H1		P21W / PY21W	W5W/ WY5W	W5W	W5W	P21/5W	R5W	P21W	P21W	W5W
ALHAMBRA (7V8, 7V9) 01/01 → 03/10 TAIL/STOPLIGHT	H7	H1	H7		P21W / PY21W	W5W/ WY5W	W5W	W5W	P21W	P21/5W	P21W	P21W	C5W
ALHAMBRA (7V8, 7V9) 01/01 → 03/10 TAILLIGHT	H7	H1	H7		P21W / PY21W	W5W/ WY5W	W5W	W5W	P21W	R5W	P21W	P21W	C5W
ALHAMBRA (7V8, 7V9) 04/96 → 12/00 XENON TAIL/STOPLIGHT	D2S	H4	H1		P21W / PY21W	W5W/ WY5W	W5W	W5W	P21/5W	P21/5W	P21W	P21W	W5W
ALHAMBRA (7V8, 7V9) 04/96 → 12/00 XENON TAILLIGHT	D2S	H4	H1		P21W / PY21W	W5W/ WY5W	W5W	W5W	P21/5W	R5W	P21W	P21W	W5W
ALHAMBRA (7V8, 7V9) 01/01 → 03/10 XENON TAIL/STOPLIGHT	D2S	H1	H7		P21W / PY21W	W5W/ WY5W	W5W	W5W	P21W	P21/5W	P21W	P21W	C5W
ALHAMBRA (7V8, 7V9) 01/01 → 03/10 XENON TAILLIGHT	D2S	H1	H7		P21W / PY21W	W5W/ WY5W	W5W	W5W	P21W	R5W	P21W	P21W	C5W
ALHAMBRA (710) 06/10 → HALOGEN	H7	H15	HB4	H15	PY21W / PY21W		W5W		P21W	W5W	H21W	W16W	W5W
ALHAMBRA (710) 06/10 → BI-XENON	D3S	D3S	HB4	P21W	PY21W / PY21W		W5W		P21W	W5W	H21W	W16W	W5W
ALTEA (5P1) 03/04 →	H7	H1	H3		PY21W / PY21W	W5W/ R10W	W5W		P21W	R10W	P21W	P21W	C5W
ALTEA XL (5P5, 5P8) 10/06 → HALOGEN	H7	H1	H3		PY21W / PY21W	W5W	W5W		P21W	W5W	P21W	P21W	C5W
ALTEA XL (5P5, 5P8) 10/06 → BI-XENON	D1S	D1S	HB4		PY21W / PY21W	W5W	W5W		P21W	W5W	P21W	P21W	C5W
AROSA (6H) 05/97 → 06/04 SINGLE REFLECTOR	H4	H4	H3		P21W / PY21W	W5W/ WY5W	W5W	W5W	P21/5W	P21/5W	P21W	P21W	C5W
AROSA (6H) 05/97 → 06/04 DUAL REFLECTOR	H7	H3	H3		P21W / PY21W	W5W/ WY5W	W5W	W5W	P21/5W	P21/5W	P21W	P21W	C5W
CORDOBA (6K1, 6K2) 02/93 → 10/99 SINGLE REFLECTOR	H4	H4	H3		PY21W / PY21W	W5W	W5W	W5W	P21/5W	P21/5W	P21W	P21W	W5W
CORDOBA (6K1, 6K2) 02/93 → 10/99 DUAL REFLECTOR	H1	H1	H3		PY21W / PY21W	W5W	W5W	W5W	P21/5W	P21/5W	P21W	P21W	W5W
CORDOBA (6K2) 06/99 → 10/02 SINGLE REFLECTOR	H4	H4	H3		PY21W / PY21W	WY5W	W5W		P21/5W	P21/5W	P21W	P21W	C5W
CORDOBA (6K2) 06/99 → 10/02 DUAL REFLECTOR	H7	H1	H7		PY21W / PY21W	WY5W	W5W		P21/5W	P21/5W	P21W	P21W	C5W
CORDOBA (6L2) 09/02 → 11/09 SINGLE REFLECTOR	H4	H4	H3		P21W / PY21W	W5W/ WY5W	W5W		P21/5W	P21/5W	P21W	P21W	C5W

CORDOBA (6L2) 09/02 → 11/09 DUAL REFLECTOR	H7	H7	H3		P21W / PY21W	W5W/ WY5W			P21/5W	P21/5W	P21W	P21W	C5W
CORDOBA (6L2) 09/02 → 11/09 XENON	D1S	H7	H3		P21W / PY21W	W5W/ WY5W			P21/5W	P21/5W	P21W	P21W	C5W
CORDOBA Vario (6K5) 08/96 → 06/99 SINGLE REFLECTOR	H4	H4	H3		PY21W / PY21W	W5W	W5W		P21/5W	P21/5W	P21W		W5W
CORDOBA Vario (6K5) 08/96 → 06/99 DUAL REFLECTOR	H1	H1	H3		PY21W / PY21W	W5W	W5W		P21/5W	P21/5W	P21W		W5W
CORDOBA Vario (6K5) 06/99 → 12/02 SINGLE REFLECTOR	H4	H4	H3		PY21W / PY21W	WY5W	W5W		P21/5W	P21/5W	P21W	P21W	W5W
CORDOBA Vario (6K5) 06/99 → 12/02 DUAL REFLECTOR	H7	H1	H3		PY21W / PY21W	WY5W	W5W		P21/5W	P21/5W	P21W	P21W	W5W
EXEO (3R2) 12/08 → HALOGEN	H7	H1	H11	P21W	PY21W / PY21W	W5W	W5W		P21W	P21W	P21W	P21W	C5W
EXEO (3R2) 12/08 → BI-XENON	D1S	D1S	H11	P21W	PY21W / PY21W	W5W	W5W		P21W	P21W	P21W	P21W	C5W
EXEO ST (3R5) 06/09 → HALOGEN	H7	H1	H11	P21W	PY21W / PY21W	W5W	W5W		P21W	W5W	P21W	H21W	C5W
EXEO ST (3R5) 06/09 → BI-XENON	D1S	D1S	H11	P21W	PY21W / PY21W	W5W	W5W		P21W	W5W	P21W	H21W	C5W
IBIZA II (6K1) 03/93 → 08/99 SINGLE REFLECTOR TAIL/STOPLIGHT	H4	H4	H3		PY21W / PY21W	W5W	W5W	W5W	P21/5W	P21/5W	P21W	P21W	W5W
IBIZA II (6K1) 03/93 → 08/99 SINGLE REFLECTOR TAILLIGHT	H4	H4	H3		PY21W / PY21W	W5W	W5W	W5W	P21/5W	R5W	P21W	P21W	W5W
IBIZA II (6K1) 03/93 → 08/99 DUAL REFLECTOR TAIL/STOPLIGHT	H1	H1	H3		PY21W / PY21W	W5W	W5W	W5W	P21/5W	P21/5W	P21W	P21W	W5W
IBIZA II (6K1) 03/93 → 08/99 DUAL REFLECTOR TAILLIGHT	H1	H1	H3		PY21W / PY21W	W5W	W5W	W5W	P21/5W	R5W	P21W	P21W	W5W
IBIZA III (6K1) 08/99 → 02/02 SINGLE REFLECTOR	H4	H4	H7		P21W / PY21W	WY5W	W5W		P21/5W	P21/5W	P21W	P21W	C5W
IBIZA III (6K1) 08/99 → 02/02 DUAL REFLECTOR	H7	H1	H7		P21W / PY21W	WY5W	W5W		P21/5W	P21/5W	P21W	P21W	C5W
IBIZA III (6K1) 08/99 → 02/02 SINGLE REFLECTOR SPORT	H4	H4	H3		P21W / PY21W	WY5W	W5W		P21/5W	P21/5W	P21W	P21W	C5W
IBIZA III (6K1) 08/99 → 02/02 DUAL REFLECTOR SPORT	H7	H1	H3		P21W / PY21W	WY5W	W5W		P21/5W	P21/5W	P21W	P21W	C5W
IBIZA IV (6L1) 02/02 → 11/09 SINGLE REFLECTOR	H4	H4	H3		P21W / PY21W	W5W/ WY5W	W5W		P21/5W	P21/5W/ W5W	P21W	P21W	C5W
IBIZA IV (6L1) 02/02 → 11/09 DUAL REFLECTOR	H7	H7	H3		P21W / PY21W	W5W/ WY5W	W5W		P21/5W	P21/5W/ W5W	P21W	P21W	C5W
IBIZA IV (6L1) 02/02 → 11/09 XENON	D1S	H7	H3		P21W / PY21W	W5W/ WY5W	W5W		P21/5W	P21/5W/ W5W	P21W	P21W	C5W
IBIZA V (6J5) 03/08 → SINGLE REFLECTOR	H4	H4	HB4		PY21W / PY21W	W5W	W5W		P21/5W	P21/5W	P21W	W16W	W5W
IBIZA V (6J5) 03/08 → DUAL REFLECTOR	H7	H7	HB4		PY21W / PY21W	W5W	W5W		P21/5W	P21/5W	P21W	W16W	W5W
IBIZA V (6J5) 03/08 → BI-XENON	D1S	D1S	HB4	P21W / LED	PY21W / PY21W	W5W	W5W		P21/5W	P21/5W	P21W	W16W	W5W
IBIZA V SPORTCOUPE (6J1) 07/08 → SINGLE REFLECTOR	H4	H4	HB4		PY21W / PY21W	W5W	W5W		P21/5W	P21/5W	P21W	W16W	W5W
IBIZA V SPORTCOUPE (6J1) 07/08 → DUAL REFLECTOR	H7	H7	HB4		PY21W / PY21W	W5W	W5W		P21/5W	P21/5W	P21W	W16W	W5W
IBIZA V SPORTCOUPE (6J1) 07/08 → BI-XENON	D1S	D1S	HB4	P21W / LED	PY21W / PY21W	W5W	W5W		P21/5W	P21/5W	P21W	W16W	W5W
IBIZA V ST (6J8) 03/10 → SINGLE REFLECTOR	H4	H4	HB4		PY21W / PY21W	W5W	W5W		P21/5W	P21/5W	H21W	R10W	W5W
IBIZA V ST (6J8) 03/10 → DUAL REFLECTOR	H7	H7	HB4		PY21W / PY21W	W5W	W5W		P21/5W	P21/5W	H21W	R10W	W5W
IBIZA V ST (6J8) 03/10 → BI-XENON	D1S	D1S	HB4	P21W	PY21W / PY21W	W5W	W5W		P21/5W	P21/5W	H21W	R10W	W5W
INCA (6K9) 11/95 → 06/03 TAIL/STOPLIGHT	H4	H4	H3		P21W / PY21W	W5W	W5W	W5W	P21/5W	P21/5W	P21W	P21W	W5W
INCA (6K9) 11/95 → 06/03 TAILLIGHT	H4	H4	H3		P21W / PY21W	W5W	W5W	W5W	P21/5W	R5W	P21W	P21W	W5W
LEON (1M1) 11/99 → 06/06	H7	H1	H3		PY21W / PY21W	W5W	W5W		P21/5W	P21/5W	P21W	P21W	C5W
LEON (1P1) 05/05 → 12/12 HALOGEN	H7	H1	H3		PY21W / PY21W	W5W	W5W		P21W	W5W	P21W	P21W	C5W
LEON (1P1) 05/05 → 12/12 XENON	D1S	H7	H3		PY21W / PY21W	W5W	W5W		P21W	W5W	P21W	P21W	C5W
LEON (1P1) 05/05 → 12/12 BI-XENON	D1S	D1S	H3		PY21W / PY21W	W5W	W5W		P21W	W5W	P21W	P21W	C5W
LEON (5F1) 09/12 →	H7	H7	H8	P21W	PY21W / PY21W		P21W		P21W	W5W	H21W	H21W	W5W
LEON (5F1) 09/12 → LED	LED	LED	H8	LED	LED / PY21W		LED		LED	LED	LED	LED	W5W
LEON SC (5F5) 01/13 →	H7	H7	H8	P21W	PY21W / PY21W		P21W		P21W	W5W	H21W	H21W	W5W
LEON SC (5F5) 01/13 → LED	LED	LED	H8	LED	LED / PY21W		LED		LED	LED	LED	LED	W5W
LEON ST (5F8) 08/13 →	H7	H7	H8	P21W	PY21W / PY21W		P21W		P21W	W5W	H21W	H21W	W5W
LEON ST (5F8) 08/13 → LED	LED	LED	H8	LED	LED / PY21W		LED		LED	LED	LED	LED	W5W
MARBELLA (28) 08/86 → 10/98	H4	H4			P21W / P21W		T4W		P21/5W	P21/5W	P21W	P21W	W5W
MII (KF1_) 10/11 →	H4	H4	HB4		PY21W / PY21W	W5W	W21/5W		P21/5W	P21/5W	P21W	R10W	W5W
TERRA (24_) HR 01/87 → 02/96	R2	R2			P21W / P21W		W5W		P21/5W	P21/5W	P21W	P21W	W5W
TERRA (24_) HR 01/87 → 12/96	H4	H4			P21W / P21W		W5W		P21/5W	P21/5W	P21W	P21W	W5W

TOLEDO I (1L) 01/91 → 10/99	H1	H1	H3		P21W / P21W	W5W	W5W	W5W	P21/5W	P21/5W	P21W	P21W	W5W
TOLEDO II (1M2) 04/99 → 05/06	H7	H1	H3		PY21W / PY21W	W5W	W5W		P21/5W	P21/5W	P21W	P21W	W5W
TOLEDO III (5P2) 04/04 → 05/09	H7	H1	H3		P21W / P21W	W5W	W5W		P21W	R10W	P21W	P21W	C5W
TOLEDO III (5P2) 10/04 → 05/09 XENON	D1S	H1	H3		P21W / PY21W	W5W	W5W		P21W	R10W	P21W	P21W	C5W
TOLEDO IV (KG3) 07/12 →	H7	H7	H8	P21W	PY21W / PY21W	WY5W	W5W		P21/5W	P21/5W / R5W	P21W	P21W	W5W
SKODA													
CITIGO 10/11 →	H4	H4	HB4	W21/5W	PY21W / PY21W	W5W	W21/5W		P21/4W	P21/4W	P21/4W	R10W	W5W
FABIA (6Y2) 08/99 → 03/08 HALOGEN	H7	H3	H3		PY21W / PY21W	WY5W	W5W		P21W	P21/4W	P21/4W	P21W	C5W
FABIA (6Y2) 08/99 → 03/08 XENON	D2S	H7	H3		PY21W / PY21W	WY5W	W5W		P21W	P21/4W	P21/4W	P21W	C5W
FABIA (NJ3) 08/14 → SINGLE REFLECTOR	H4	H4	H9	P21W	PY21W / PY21W	WY5W	W5W		P21/4W	P21/4W / W3W	P21W	P21W	W5W
FABIA (NJ3) 08/14 → DUAL REFLECTOR	H7	H7	H9	P21W	PY21W / PY21W	WY5W	W5W		P21/4W	P21/4W / W3W	P21W	P21W	W5W
FABIA Combi (6Y5) 04/00 → 12/07	H7	H3	H3		PY21W / PY21W	WY5W	W5W		P21W	P21/4W	P21/4W	P21W	C5W
FABIA Combi (6Y5) 04/00 → 12/07 XENON	D2S	H7	H3		PY21W / PY21W	WY5W	W5W		P21W	P21/4W	P21/4W	P21W	C5W
FABIA Combi 10/07 → HALOGEN	H7	H3	HB4		PY21W / PY21W	WY5W	W5W		P21/4W	P21/4W	P21W	P21W	C5W
FABIA Combi 10/07 → XENON	D2S	H7	HB4		PY21W / PY21W	WY5W	W5W		P21/4W	P21/4W	P21W	P21W	C5W
FABIA Combi (NJ5) 10/14 → SINGLE REFLECTOR	H4	H4	H9	P21W	PY21W / PY21W	WY5W	W5W		P21/4W	P21/4W / W3W	P21W	P21W	W5W
FABIA Combi (NJ5) 10/14 → DUAL REFLECTOR	H7	H7	H9	P21W	PY21W / PY21W	WY5W	W5W		P21/4W	P21/4W / W3W	P21W	P21W	W5W
FABIA Hatchback (6Y3) 10/99 → 12/07 HALOGEN	H7	H3	H3		PY21W / PY21W	WY5W	W5W		P21/4W	P21/4W	P21W	P21W	C5W
FABIA Hatchback (6Y3) 10/99 → 12/07 XENON	D2S	H7	H3		PY21W / PY21W	WY5W	W5W		P21/4W	P21/4W	P21W	P21W	C5W
FABIA Praktik 07/01 → 12/07	H7	H3	H3		PY21W / PY21W	WY5W	W5W		P21/4W	P21/4W	P21W	P21W	C5W
FABIA 12/06 → 12/14 SINGLE REFLECTOR	H4	H4	H8	P21W	PY21W / PY21W		W5W		P21W	W5W	P21W	P21W	C5W
FABIA 12/06 → 12/14 DUAL REFLECTOR	H7	H7	H8	P21W	PY21W / PY21W		W5W		P21W	W5W	P21W	P21W	C5W
FAVORIT Pick-up (787) 06/92 → 06/97	H4	H4			P21W / P21W		T4W		P21W	R10W	P21W	P21W	T4W
FAVORIT 07/97 →	H4	H4	H3		P21W / P21W		T4W		P21W	R5W	P21W	P21W	R5W
FELICIA I (6U1) 10/94 → 03/98 TAIL/STOPLIGHT	H4	H4	H3		PY21W / PY21W	W5W/WY5W	W5W	W5W	P21/5W	P21/5W	P21W	P21W	W5W
FELICIA I (6U1) 10/94 → 03/98 TAILLIGHT	H4	H4	H3		PY21W / PY21W	W5W/WY5W	W5W	W5W	P21/5W	R5W	P21W	P21W	W5W
FELICIA I Estate (6U5) 07/95 → 03/98	H4	H4	H3		PY21W / PY21W	W5W/WY5W	W5W	W5W	P21/5W	P21/5W	P21W	P21W	W5W
FELICIA I Fun (797) 10/95 → 04/02	H4	H4	H3		PY21W / PY21W	W5W	W5W	W5W	P21/5W	P21/5W	P21W	P21W	W5W
FELICIA II (6U1) 01/98 → 06/01	H4	H4	H3		PY21W / PY21W	W5W/WY5W	W5W	W5W	P21/5W	P21/5W	P21W	P21W	W5W
FELICIA II Estate (6U5) 01/98 → 06/01	H4	H4	H3		PY21W / PY21W	W5W/WY5W	W5W	W5W	P21/5W	P21/5W	P21W	P21W	W5W
OCTAVIA (1U2) 09/96 → 12/10 HALOGEN TAIL/STOPLIGHT	H4	H4	H3		PY21W / PY21W	WY5W	W5W	W2,3W	P21W	P21/4W	P21/4W	P21W	W5W
OCTAVIA (1U2) 09/96 → 12/10 HALOGEN TAILLIGHT	H4	H4	H3		PY21W / PY21W	WY5W	W5W	W2,3W	P21W	R5W	P21W	P21W	W5W
OCTAVIA (1U2) 09/96 → 12/10 XENON TAIL/STOPLIGHT	D2S	H1	H3		PY21W / PY21W	WY5W	W5W	W2,3W	P21W	P21/4W	P21/4W	P21W	W5W
OCTAVIA (1U2) 09/96 → 12/10 XENON TAILLIGHT	D2S	H1	H3		PY21W / PY21W	WY5W	W5W	W2,3W	P21W	R5W	P21W	P21W	W5W
OCTAVIA (1Z3) 02/04 → 06/13 HALOGEN TAIL/STOPLIGHT	H7	H1	H8	P21W	PY21W / PY21W		W5W		P21W	P21/4W	P21/4W	P21W	C5W
OCTAVIA (1Z3) 02/04 → 06/13 HALOGEN TAILLIGHT	H7	H1	H8	P21W	PY21W / PY21W		W5W		P21W	W3W	P21W	P21W	C5W
OCTAVIA (1Z3) 02/04 → 06/13 XENON TAIL/STOPLIGHT	D1S	H1	H8	P21W	PY21W / PY21W		W5W		P21W	P21/4W	P21/4W	P21W	C5W
OCTAVIA (1Z3) 02/04 → 06/13 XENON TAILLIGHT	D1S	H1	H8	P21W	PY21W / PY21W		W5W		P21W	W3W	P21W	P21W	C5W
OCTAVIA (5E3) 11/12 →	H7	H15	H8	H15	/ PY21W		W5W		P21W / LED	LED / W5W	H21W	P21W	W5W
OCTAVIA (5E3) 11/12 → BI-XENON	D3S		H8	LED / P21/5W	/ PY21W		LED / P21/5W		P21W / LED	LED / W5W	H21W	P21W	W5W
OCTAVIA Combi (1U5) 07/98 → 12/10 HALOGEN TAIL/STOPLIGHT	H4	H4	H3		PY21W / PY21W	WY5W	W5W		P21/5W	P21/5W	P21W	P21W	W5W
OCTAVIA Combi (1U5) 07/98 → 12/10 HALOGEN TAILLIGHT	H4	H4	H3		PY21W / PY21W	WY5W	W5W		P21W	R5W	P21W	P21W	W5W
OCTAVIA Combi (1U5) 07/98 → 12/10 XENON TAIL/STOPLIGHT	D2S	H1	H3		PY21W / PY21W	WY5W	W5W		P21/5W	P21/5W	P21W	P21W	W5W
OCTAVIA Combi (1U5) 07/98 → 12/10 XENON TAILLIGHT	D2S	H1	H3		PY21W / PY21W	WY5W	W5W		P21W	R5W	P21W	P21W	W5W
OCTAVIA Combi (1Z5) 02/04 → 06/13 HALOGEN	H7	H1	H8	P21W	PY21W / PY21W	W5W	W5W		P21/4W	P21/4W	P21/4W	P21W	C5W
OCTAVIA Combi (1Z5) 02/04 → 06/13 XENON	D1S	H1	H8	P21W	PY21W / PY21W	W5W	W5W		P21/4W	P21/4W	P21/4W	P21W	C5W

OCTAVIA Combi (5E5) 11/12 →	H7	H15	H8	H15	/ PY21W		W5W		P21W / LED	LED / W5W	P21W	P21W	W5W
OCTAVIA Combi (5E5) 11/12 → BI-XENON	D3S		H8	LED / P21/5W	/ PY21W		LED / P21/5W		P21W / LED	LED / W5W	P21W	P21W	W5W
PICK UP 01/97 →	H4	H4	H3		P21W / P21W		T4W		P21W	R5W	P21W	P21W	R5W
RAPID (NH3) 07/12 →	H7	H15	H8	H15	PY21W / PY21W		W5W		P21/4W	P21/4W	P21W	P21W	W5W
RAPID (NH3) 07/12 → BI-XENON			H8		PY21W / PY21W		W5W		P21/4W	P21/4W	P21W	P21W	W5W
RAPID Spaceback (NH1) 07/12 →	H7	H15	H8	H15	PY21W / PY21W		W5W		P21/4W	P21/4W	P21W	P21W	W5W
RAPID Spaceback (NH1) 07/12 → BI-XENON			H8		PY21W / PY21W		W5W		P21/4W	P21/4W	P21W	P21W	W5W
ROOMSTER (5J) 03/06 →	H4	H4	H8	P21W	PY21W / PY21W	WY5W	W5W		P21W	W5W	P21W	P21W	W5W
ROOMSTER Praktik (5J) 03/07 → SINGLE REFLECTOR	H4	H4	H8	P21W	PY21W / PY21W	WY5W	W5W		P21W	W5W	P21W	P21W	W5W
ROOMSTER Praktik (5J) 03/07 → DUAL REFLECTOR	H7	H7	H8	P21W	PY21W / PY21W	WY5W	W5W		P21W	W5W	P21W	P21W	W5W
SUPERB (3U4) 02/02 → 03/08	H7	H3	H3		PY21W / PY21W	WY5W	W5W		P21W	P21/4W	P21/4W	P21W	C5W
SUPERB (3U4) 02/02 → 03/08 XENON	D2S	H3	H3		PY21W / PY21W	WY5W	W5W		P21W	P21/4W	P21/4W	P21W	C5W
SUPERB (3T4) 03/08 → 05/15	H7	H3	H8	P21W	PY21W / PY21W	WY5W	W5W		W16W	W5W	P21W	W16W	C5W
SUPERB (3T4) 03/08 → 05/15 BI-XENON	D1S	H3	H8	P21W	PY21W / PY21W	WY5W	W5W		W16W	W5W	P21W	W16W	C5W
SUPERB (3V3) 03/15 →	H7	H7	H8										
SUPERB (3V3) 03/15 → BI-XENON	D3S		H8										
SUPERB Estate (3T5) 10/09 → 05/15	H7	H3	H8	P21W	RY10W		W5W		W16W	W5W	P21W	W16W	C5W
SUPERB Estate (3T5) 10/09 → 05/15 BI-XENON	D1S	H3	H8	P21W	RY10W		W5W		W16W	W5W	P21W	W16W	C5W
SUPERB Estate (3V5) 03/15 →	H7	H7	H8										
SUPERB Estate (3V5) 03/15 → BI-XENON	D3S		H8										
YETI (5L) 05/09 →	H4	H4	H7		PY21W / PY21W		W5W		P21W	W5W	P21W	P21W	C5W
YETI (5L) 05/09 → BI-XENON	D1S	D1S	H7		PY21W / PY21W		W5W		P21W	W5W	P21W	P21W	C5W
SMART													
CABRIO (450) 03/00 → 01/04 SINGLE REFLECTOR	H4	H4	H3		P21W / PY21W	W5W	W5W	W2,3W	P21/5W	P21/5W	P21W	P21W	C5W
CABRIO (450) 03/00 → 01/04 DUAL REFLECTOR	H7	H1	H3		P21W / PY21W	W5W	W5W	W2,3W	P21/5W	P21/5W	P21W	P21W	C5W
CITY-COUPE (450) 07/98 → 01/04 SINGLE REFLECTOR	H4	H4	H3		P21W / PY21W	W5W	W5W	W2,3W	P21/5W	P21/5W	P21W	P21W	C5W
CITY-COUPE (450) 07/98 → 01/04 DUAL REFLECTOR	H7	H1	H3		P21W / PY21W	W5W	W5W	W2,3W	P21/5W	P21/5W	P21W	P21W	C5W
CROSSBLADE (450) 06/02 → 12/03	H7	H1	H3		P21W / PY21W	WY5W	W5W	W2,3W	P21/5W	P21/5W	P21W	P21W	C5W
FORFOUR (454) 01/04 → 06/06	H7	H7	H8		P21W / P21W	W5W	W5W		P21/5W	P21/5W	P21W	P21W	W5W
FORFOUR Hatchback (453) 07/14 →	H4	H4			PY21W / PY21W	WY5W			P21/5W	P21/5W	P21W	W16W	W5W
FORTWO 06/02 →	H7	H1	H3		P21W / PY21W		W5W		P21/5W	P21/5W	P21W	P21W	C5W
FORTWO Convertible (450) 01/04 → 01/07	H7	H1	H3		P21W / PY21W	WY5W	W5W	W2,3W	P21/5W	P21/5W	P21W	P21W	C5W
FORTWO Convertible (451) 01/07 →	H7	H7	H11		PY21W / PY21W	WY5W	W5W		W16W	P21/5W	P21W	P21W	C5W
FORTWO Coupe (450) 01/04 → 01/07	H7	H1	H3		P21W / PY21W	WY5W	W5W	W2,3W	P21/5W	P21/5W	P21W	P21W	C5W
FORTWO Coupe (451) 01/07 →	H7	H7	H11		PY21W / PY21W	WY5W	W5W	W16W	W16W	P21/5W	P21W	P21W	C5W
FORTWO Coupe (451) 07/14 →	H4	H4			PY21W / PY21W	WY5W			P21/5W	P21/5W	P21W	W16W	W5W
ROADSTER (452) 04/03 → 11/05	H7	H1	H3		P21W / PY21W	WY5W	W5W	W2,3W	P21/5W	P21/5W	P21W	P21W	C5W
ROADSTER Coupe (452) 04/03 → 11/05	H7	H1	H3		P21W / PY21W	WY5W	W5W	W2,3W	P21/5W	P21/5W	P21W	P21W	C5W
SSANGYONG													
ACTYON I 11/05 →	H4	H4			PY21W / PY21W	W5W	W5W	W5W	P21/5W	P21/5W	P21W	W16W	W5W
ACTYON SPORTS I Pick-up (QJ) 11/05 →	H4	H4			PY21W / PY21W	W5W	W5W	W5W	P21/5W	P21/5W	P21W	W16W	W5W
KORANDO (KJ) 12/96 →	H4	H4	H3		P21W	W5W	W5W		P21/5W	P21/5W	P21W	P21W	W5W
KORANDO Convertible (KJ) 12/96 →	H4	H4	H3		P21W	W5W			P21/5W	P21/5W	P21W	P21W	W5W
KORANDO 11/10 →	H4	H4			PY21W / P21W	W5W	W5W		P21/5W	P21/5W	P21W	P21W	W5W
KYRON 05/05 →	H7	H1			P21W / PY21W	W5W	W5W				P21W	P21W	W5W
MUSSO (FJ) 02/95 →	H4	H4	H3		PY21W / PY21W	W5W	W5W	P21W	P21W	R5W	P21W	P21W	W5W

MUSSO SPORTS 08/04 →	H4	H4	H3		PY21W / PY21W	W5W		P21W	P21W	R5W	P21W	P21W	W5W
REXTON (GAB_) 04/02 →	H7	H7			P21W/	W5W	W5W	W5W	P21W	P27/7W	P21W	P21W	C5W
REXTON W 07/12 →	H7	H1	H8		PY21W / PY21W						P21W	W16W	W5W
RODIUS 05/05 →	H7	H7			PY21W /	W5W	W5W	W5W	P21/5W	P21/5W	P21W	P21W	W5W
STAVIC 02/05 →	H7	H7			PY21W /	W5W	W5W	W5W	P21/5W	P21/5W	P21W	P21W	W5W
SUBARU													
BRZ 06/12 →	D4S	D4S		LED	WY21W / WY21W	WY5W					W21W	W16W	W5W
E-SERIES/LIBERO 01/93 → 02/00	H4	H4			P21W / P21W		R5W		P21/5W	P21/5W	P21W	P21W	W5W
FORESTER (SF) 07/97 → 07/99	H4	H4	HB4		P21W / P21W	W5W	W5W	W16W	P21/5W	P21/5W	P21W	P21W	W5W
FORESTER (SF) 08/99 → 09/02	H4	H4	HB4		P21W / PY21W	W5W	W5W	W16W	W21/5W	W21/5W	P21W	W16W	W5W
FORESTER (SG) 07/02 →	H4	H4	H3		PY21W / PY21W	W5W	W5W	R10W	W21/5W	W21/5W	W21W	W21W	W5W
FORESTER (SH) 01/08 →	H11	HB3	HB4		WY21W / WY21W	W5W	W5W		W21/5W	W21/5W	W21W	W21W	W5W
FORESTER (SH) 01/08 → XENON	D2R	HB3	HB4		WY21W / WY21W	W5W	W5W		W21/5W	W21/5W	W21W	W21W	W5W
FORESTER (SJ) 03/13 →	H11	HB3			WY21W / WY21W		W5W		W21/5W	W21/5W	W16W	W16W	W5W
FORESTER (SJ) 03/13 → XENON	D4R	HB3			WY21W / WY21W		W5W		W21/5W	W21/5W	W16W	W16W	W5W
IMPREZA Coupe (GFC) 01/93 → 06/96	H4	H4			P21W / P21W	W5W	R5W		P21/5W	P21/5W	P21W	P21W	W5W
IMPREZA Coupe (GFC) 07/96 → 12/00	H4	H4	H3		P21W / P21W	W5W	W5W		P21/5W	P21/5W	P21W	P21W	W5W
IMPREZA Notchback (GC) 08/92 → 12/00	H4	H4	H3		P21W / P21W	W5W	W5W		P21/5W	P21/5W	P21W	P21W	W5W
IMPREZA Notchback (GD, GG) 10/00 → SINGLE REFLECTOR	H4	H4	H3		P21W / PY21W	W5W	W5W	W16W	P21/5W	P21/5W	W21W	W21W	W5W
IMPREZA Notchback (GD, GG) 10/00 → DUAL REFLECTOR	HB3	H1	H3		P21W / PY21W	W5W	W5W	W16W	P21/5W	P21/5W	W21W	W21W	W5W
IMPREZA Hatchback (GR, GH, G3) 01/08 →	H11	HB3	HB4		P21W / WY21W		W5W	P21W	W21/5W	W21/5W	W16W	W16W	W5W
IMPREZA Hatchback (GR, GH, G3) 01/08 → XENON	D2S	HB3	HB4		P21W / WY21W		W5W	P21W	W21/5W	W21/5W	W16W	W16W	W5W
IMPREZA Notchback (GR) 01/08 →	H11	HB3	HB4		WY21W / WY21W	W5W	W5W		LED	LED	W21W	W16W	W5W
IMPREZA Notchback (GR) 01/08 → XENON	D2S	HB3	HB4		WY21W / WY21W	W5W	W5W		LED	LED	W21W	W16W	W5W
IMPREZA Station Wagon (GF) 08/92 → 12/00	H4	H4	H3		P21W / P21W	W5W	W5W		P21/5W	P21/5W	P21W	P21W	W5W
IMPREZA Station Wagon (GD, GG) 10/00 → 06/02 SINGLE REFLECTOR	H4	H4	H3		P21W / PY21W	W5W	W5W		W21/5W	W21/5W	W21W	W21W	W5W
IMPREZA Station Wagon (GD, GG) 07/02 → SINGLE REFLECTOR	H4	H4	H3		W21W / P21W	W5W	W5W		W21/5W	W21/5W	W21W	W21W	W5W
IMPREZA Station Wagon (GD, GG) 10/00 → 06/02 DUAL REFLECTOR	HB3	H1	H3		P21W / PY21W	W5W	W5W		W21/5W	W21/5W	W21W	W21W	W5W
IMPREZA Station Wagon (GD, GG) 07/02 → DUAL REFLECTOR	HB3	H1	H3		W21W / P21W	W5W	W5W		W21/5W	W21/5W	W21W	W21W	W5W
JUSTY II (JMA, MS) 10/95 → 11/03	H4	H4			P21W / P21W	W5W	W5W		P21/5W	P21/5W	P21W	P21W	W5W
JUSTY III (G3X) 09/03 →	H4	H4	H3		P21W / PY21W	WY5W	W5W	W5W	P21/5W	P21/5W	P21W	P21W	W5W
JUSTY IV 01/07 →	H4	H4	HB4		PY21W / WY21W	W5W	W5W	W16W	P21/5W	P21/5W	P21W		W5W
LEGACY II (BD, BG) 07/94 → 03/99	H4	H4			P21W / P21W	W5W	W5W	W16W	P21W	R10W	P21W	P21W	W5W
LEGACY II Station Wagon (BD, BG) 02/94 → 12/98	H4	H4			P21W / P21W	W5W	W5W	W16W	P21/5W	P21/5W	P21W	P21W	W5W
LEGACY III (BE, BH) 10/98 → 08/03	H4	H4	H3		PY21W / PY21W	W5W	W5W	W16W	P21/5W	P21/5W	P21W	P21W	W5W
LEGACY III Station Wagon (BE, BH) 10/98 → 08/03	H4	H4	H3		PY21W / PY21W	W5W	W5W	W16W	W16W	P21/5W	P21W	P21W	W5W
LEGACY IV (BL, BP) 09/03 →	H7	H9	HB4		WY21W / WY21W		W5W	P21W	W21/5W	W21/5W	P21W	W16W	W5W
LEGACY IV (BL, BP) 09/03 → XENON	D2S	HB3	HB4		WY21W / WY21W		W5W	P21W	W21/5W	W21/5W	P21W	W16W	W5W
LEGACY IV Station Wagon (BL, BP, B13_) 09/03 →	H7	H9	HB4		WY21W / WY21W		W5W		W21/5W	W21/5W	LED	W16W	W5W
LEGACY IV Station Wagon (BL, BP, B13_) 09/03 → XENON	D2S	HB3	HB4		WY21W / WY21W		W5W		W21/5W	W21/5W	LED	W16W	W5W
LEGACY V (BM, BR) 09/09 →	H7	HB3	H11		WY21W / W21W	W5W	W5W		W21/5W	W21/5W	W21W	W16W	W5W
LEGACY V (BM, BR) 09/09 → XENON	D2S	HB3	H11		WY21W / W21W	W5W	W5W		W21/5W	W21/5W	W21W	W16W	W5W
LEGACY V Station Wagon (BM, BR) 09/09 →	H7	HB3	H11		WY21W / W21W	W5W	W5W		W21/5W	W21/5W	W21W	W16W	W5W
LIBERO Bus (E10, E12) 01/83 → 02/00	H4	H4			P21W / P21W		R5W	W16W	P21/5W	P21/5W	P21W	P21W	C5W
OUTBACK (BE, BH) 01/00 → 08/03	H1	H7	H3		PY21W / PY21W	W5W	W5W	R10W	P21/5W	P21/5W	P21W	P21W	W5W
OUTBACK (BL, BP) 09/03 → 09/09 HALOGEN	H7	HB3	H3		WY21W / WY21W		W5W	P21W	W21/5W	W21/5W	W21W	W21W	W5W

OUTBACK (BL, BP) 09/03 → 09/09 XENON	D2S	HB3	H3		WY21W / WY21W		W5W	P21W	W21/5W	W21/5W	W21W	W21W	W5W
OUTBACK (BM, BR) 09/09 → HALOGEN	H7	HB3	H11		WY21W / W21W	W5W	W5W		W21W	W5W	W21W	W16W	W5W
OUTBACK (BM, BR) 09/09 → XENON	D2S	HB3	H11		WY21W / W21W	W5W	W5W		W21W	W5W	W21W	W16W	W5W
SVX (CX) 09/92 → 12/97	H1	H3			P21W / P21W	W5W	W5W		P21/5W	P21/5W	P21W	P21W	W5W
TREZIA 03/11 →	H4	H4	H11		WY21W / WY21W		W5W		W21/5W	W21/5W	W21W	W16W	W5W
TRIBECA (B9) 01/05 →	H7	H9	H11		PY21W / P21W		W5W		P21/5W	P21/5W	P21W	P21W	W5W
VIVIO 03/92 → 12/98	H4	H4			P21W / P21W	W5W	R5W	P21W	P21/5W	P21/5W	P21W	P21W	W5W
SUZUKI													
ALTO III (EF) 09/94 → 06/02	H4	H4			P21W / P21W	W5W	W5W		P21/5W	P21/5W	P21W	P21W	W5W
ALTO IV (FF) 06/02 →	H4	H4			W21W / P21W	W5W	W5W		P21/5W	P21/5W	P21W	P21W	W5W
ALTO V (GF) 01/09 →	H4	H4	H11		PY21W / PY21W	WY5W	W5W	W5W	P21/5W	P21/5W	P21W	P21W	W5W
BALENO (EG) 03/95 → 05/02	H4	H4	H3		W21W / P21W	W5W	W5W		P21/5W	P21/5W	P21W	P21W	W5W
BALENO Estate (EG) 08/96 → 05/02	H4	H4	H3		W21W / P21W	W5W	W5W		P21/5W	P21/5W	P21W	P21W	W5W
BALENO Notchback (EG) 03/95 → 05/02	H4	H4	H3		W21W / P21W	W5W	W5W		P21W	W5W	P21W	P21W	W5W
CARRY Box (FD) 02/99 →	H4	H4			P21W / PY21W	W5W	W5W	W5W	P21/5W	P21/5W			W5W
GRAND VITARA I (FT, GT) 03/98 → 07/03	H4	H4	H3		P21W / P21W	W5W	W5W		P21/5W	P21/5W	P21W	P21W	W5W
GRAND VITARA II (JT) 04/05 →	H7	HB3	H11		WY21W / WY21W	W5W	W5W	W5W	W21/5W	W21/5W		W21W	W5W
GRAND VITARA II (JT) 04/05 → XENON	D2S	HB3	H11		WY21W / WY21W	W5W	W5W	W5W	W21/5W	W21/5W		W21W	W5W
IGNIS (FH) 10/00 → 12/05	H4	H4			PY21W / PY21W	W5W	W5W	W5W	P21/5W	P21/5W	P21W	P21W	W5W
IGNIS II 09/03 →	H4	H4	H3		P21W / PY21W	WY5W	W5W	W5W	P21/5W	P21/5W	P21W	P21W	W5W
JIMNY (FJ) 09/98 →	H4	H4	H3		PY21W / W16W	W5W	W5W		W21/5W	W21/5W	W21W	W21W	W5W
KIZASHI (FR) 10/10 → HALOGEN	H7	H7	H11		PY21W / PY21W	W5W	W5W		P21/5W	P21/5W	P21W	P21W	C5W
KIZASHI (FR) 10/10 → XENON	D2S	H7	H11		PY21W / PY21W	W5W	W5W		P21/5W	P21/5W	P21W	P21W	C5W
LIANA (ER) 10/01 →	H4	H4	H3		W21W / W21W	W5W	W5W	W16W	P21/5W	P21/5W	P21W	P21W	W5W
LIANA Estate (ER) 07/01 → 12/07	H4	H4	H3		W21W / W21W	W5W	W5W	W5W	P21/5W	P21/5W	P21W	P21W	W5W
SAMURAI (SJ) 11/88 → 12/04	H4	H4			P21W / P21W		W5W / T4W		P21/5W	P21/5W	P21W	P21W	C5W
SPLASH 01/08 →	H4	H4	H11		PY21W / PY21W	WY5W	W5W	W5W	P21/5W	P21/5W	P21W	P21W	W5W
SUPER CARRY Bus (ED) 07/85 → 03/99	R2	R2	R2		P21W / P21W		W5W		P21/5W	P21/5W	P21W	P21W	C5W
SWIFT II Notchback (AH, AJ) 03/89 → 05/01	H4	H4	H3		P21W / P21W	W5W	W5W		P21/5W	P21/5W	P21W	P21W	W5W
SWIFT II Hatchback (EA, MA) 03/89 → 12/04	H4	H4	H3		P21W / P21W	W5W	W5W		P21/5W	P21/5W	P21W	P21W	W5W
SWIFT III (MZ, EZ) 02/05 →	H4	H4	H3		PY21W / PY21W		W5W		P21/5W	W5W	P21W	P21W	W5W
SWIFT IV (FZ, NZ) 10/10 →	H4	H4	H11		PY21W / PY21W	WY5W	W5W		P21/5W	P21/5W	P21W	P21W	W5W
SX4 (GY) 06/06 → HALOGEN	H4	H4	H11		WY21W / WY21W		W5W		W21/5W	W21/5W	W21W	W21W	W5W
SX4 (GY) 06/06 → XENON	D2S	H7	H11		WY21W / WY21W		W5W		W21/5W	W21/5W	W21W	W21W	W5W
SX4 Notchback (GY) 10/07 → HALOGEN	H4	H4	H11		WY21W / WY21W	WY5W	W5W	W16W	W21/5W	W21/5W	W21W	W21W	W5W
SX4 Notchback (GY) 10/07 → XENON	D2S	H7	H11		WY21W / WY21W	WY5W	W5W	W16W	W21/5W	W21/5W	W21W	W21W	W5W
SX4 S-Cross 08/13 → HALOGEN	H4	H4	H11	W21/5W	PY21W / PY21W		W5W	W5W	P21/5W	P21/5W	P21W	W16W	W5W
SX4 S-Cross 08/13 → BI-XENON	D4S	D4S	H11	LED	PY21W / PY21W		LED	W5W	P21/5W	P21/5W	P21W	W16W	W5W
VITARA (ET, TA) 07/88 → 12/98	H4	H4	H3		P21W / P21W	T4W	W5W		P21/5W	P21/5W	P21W	P21W	W5W
VITARA Convertible (ET, TA) 07/88 → 10/02	H4	H4	H3		P21W / P21W	T4W	W5W		P21/5W	P21/5W	P21W	P21W	W5W
VITARA (ET) 12/03 → 12/05	H4	H4			P21W / PY21W		W5W		P21/5W	P21/5W	P21W	P21W	C5W
WAGON R+ (EM) 10/97 → 05/00	H4	H4	H3		P21W / P21W	W5W	W5W	W5W	P21/5W	P21/5W	P21W	P21W	W5W
WAGON R+ (MM) 05/00 →	H4	H4			PY21W / PY21W	W5W	W5W	W5W	P21/5W	P21/5W	P21W	P21W	W5W
X-90 (EL) 09/95 → 12/97	H4	H4	H3		P21W / P21W	W5W	W5W		P21/5W	P21/5W	P21W	P21W	W5W

TOYOTA													
4 RUNNER (KZN18_, VZN18_, RZN18_) 11/95 → 07/98	H4	H4	H3		P27 / P21W	-	W5W	W16W	P21/5W	P21/5W	P21W	P21W	W5W
4 RUNNER (KZN18_, VZN18_, RZN18_) 08/98 → 08/00	H4	H4	H3		P21W / P21W	-	W5W	W16W	P21/5W	P21/5W	P21W	P21W	W5W
4 RUNNER (KZN18_, VZN18_, RZN18_) 09/00 → 11/02	H4	H4	H3		P21W / PY21W	-	W5W	W16W	P21/5W	P21/5W	P21W	P21W	W5W
AURIS (ZZE15_, ADE15_, ZRE15_, NDE15_) 10/06 → 2009	H11	HB3	H11		PY21W / PY21W	LED	W5W		W16W	R5W	P21W	P21W	W5W
AURIS (ZZE15_, ADE15_, ZRE15_, NDE15_) 10/06 → 2009 XENON	D4S	HB3	H11		PY21W / PY21W	LED	W5W		W16W	R5W	P21W	P21W	W5W
AURIS (ZZE15_, ADE15_, ZRE15_, NDE15_) 2010 →	H11	HB3	H11		PY21W / WY21W	LED	W5W		W16W	W5W	W21W	W16W	W5W
AURIS (ZZE15_, ADE15_, ZRE15_, NDE15_) 2010 → XENON	D4S	HB3	H11		PY21W / WY21W	LED	W5W		W16W	W5W	W21W	W16W	W5W
AURIS (NZ18_, ZRE18_) 10/12 →				LED	PY21W / W16W	W5W	LED		P21/5W	P21/5W	W21W	W16W	W5W
AURIS (NZ18_, ZRE18_) 10/12 → BI-XENON	D4S	D4S		LED	PY21W / W16W	W5W	LED		LED	LED	W21W	W16W	W5W
AURIS TOURING SPORTS (07/13 →	H11	HB3	H11 / H16	LED	PY21W / WY21W	LED	W5W		W16W	W5W	W21W	W16W	W5W
AURIS TOURING SPORTS (07/13 → XENON	D4S		H11 / H16	LED	PY21W / WY21W	LED	W5W		W16W	W5W	W21W	W16W	W5W
AVENSIS (_T22_) 09/97 → 02/03	H7	H7	H7		P21W / PY21W	W5W	W5W	P21W	P21W	R5W	P21W	P21W	W5W
AVENSIS (T25_) 04/03 → 11/08	H7	H1	HB4		P21W / PY21W	WY5W	W5W		P21W	R5W	P21W	P21W	W5W
AVENSIS (T25_) 04/03 → 11/08 XENON	D2S	H1	HB4		PY21W / WY21W	WY5W	W5W		P21W	R5W	P21W	P21W	W5W
AVENSIS Estate (T25) 04/03 → 11/08	H7	H1	HB4		P21W / PY21W	WY5W	W5W		P21/5W	P21/5W	P21W	P21W	W5W
AVENSIS Estate (T25) 04/03 → 11/08 XENON	D2S	H1	HB4		PY21W / WY21W	WY5W	W5W		P21/5W	P21/5W	P21W	P21W	W5W
AVENSIS Hatchback (T25) 04/03 → 11/08	H7	H1	HB4		P21W / PY21W	WY5W	W5W		P21W	R5W	P21W	P21W	W5W
AVENSIS Hatchback (T25) 04/03 → 11/08 XENON	D2S	H1	HB4		PY21W / WY21W	WY5W	W5W		P21W	R5W	P21W	P21W	W5W
AVENSIS Liftback (_T22_) 09/97 → 02/03	H7	H7	H7		P21W / PY21W	W5W	W5W	P21W	P21W	R5W	P21W	P21W	W5W
AVENSIS Station Wagon (_T22_) 09/97 → 02/03	H7	H7	H7		P21W / PY21W	W5W	W5W	P21W	P21/5W	P21/5W	P21W	P21W	W5W
AVENSIS Station Wagon (T27) 02/09 →	H11	HB3	H11		PY21W / WY21W	LED	W5W		LED	LED	P21W	P21W	W5W
AVENSIS Station Wagon (T27) 02/09 → XENON	D4S	HB3	H11		PY21W / WY21W	LED	W5W		LED	LED	P21W	P21W	W5W
AVENSIS VERSO (_CLM2_, _ACM2_) 08/01 → 11/09 I	HB4	HB3	HB4		P21W / PY21W	W5W	W5W	P21W	P21/5W	P21/5W	P21W	P21W	W5W
AVENSIS VERSO (_CLM2_, _ACM2_) 08/01 → 11/09 II	H7	HB3	H3		P21W / PY21W	W5W	W5W	W16W	W21/5W	W21/5W	W21W	W21W	W5W
AYGO (PAB4_, KGB4_) 05/14 →	HIR2	HIR2	H16	LED	P21W / PY21W	WY5W	LED		W21/5W	W21/5W	W21W	W21W	W5W
AYGO (WNB1_, KGB1_) 02/05 →	H4	H4			P21W / PY21W	-	W5W	W5W	P21/5W	P21/5W	P21W	P21W	W5W
CAMRY (_CV1_, _XV1_, _V1_) 06/91 → 09/97	H4	H4	-		P21W / P21W	W5W	W5W		P21/5W	P21/5W	P21W	P21W	W5W
CAMRY (_CV2_, _XV2_) 08/96 → 07/99	H4	H4	H3		PY21W / W21W	W5W	W5W	W16W	W21/5W	W21/5W	W21W	W21W	W5W
CAMRY (_CV2_, _XV2_) 08/99 → 11/01	HB4	HB3	H3		PY21W / W21W	W5W	W5W	W16W	W21/5W	W21/5W	W21W	W21W	W5W
CAMRY (MCV3_, ACV3_, _XV3_) 08/01 → 11/06	H7	HB3	HB4		W21W / W16W	W5W	W5W	W16W	W21/5W	W21/5W	W21W	W16W	W5W
CAMRY Station Wagon (_XV1_, _CV1_, _V10) 06/91 → 08/97	H4	H4			P21W / P21W		W5W		P21/5W	P21/5W	P21W	P21W	W5W
CARINA E (_T19_) 04/92 → 09/97	H4	H4	H3		P21W / P21W	W5W	W5W	W16W	W21/5W	W21/5W	P21W	P21W	W5W
CARINA E Notchback (_T19_) 04/92 → 09/97	H4	H4	H3		P21W / P21W	W5W	W5W	W16W	W21/5W	W21/5W	P21W	P21W	W5W
CARINA E Sportswagon (_T19_) 01/93 → 09/97	H4	H4	H3		P21W / P21W	W5W	W5W		P21/5W	P21/5W	P21W	P21W	W5W
CELICA (_T20_) 11/93 → 11/99	HB4	HB3	H3		P21W / P21W	W5W	W5W	P21W	P21/5W	P21/5W	P21W	P21W	W5W
CELICA Convertible (_T20_) 11/93 → 11/99	HB4	HB3	H3		P21W / P21W	W5W	W5W	P21W	P21/5W	P21/5W	P21W	P21W	W5W
CELICA (ZZT23_) 11/99 → 03/06	H7	HB3	H3		P21W / PY21W	W5W	W5W		W21/5W	W21/5W	P21W	W16W	W5W
COROLLA (_E10_) 06/91 → 11/99	H4	H4	H3		P21W / P21W	W5W	W5W	P21W	P21/5W	P21/5W	P21W	P21W	R10W
COROLLA (_E10_) Compact 05/92 → 11/99	H4	H4	H3		P21W / P21W	W5W	W5W		P21/5W	P21/5W	P21W	P21W	W5W
COROLLA (_E10_) Liftback 05/92 → 04/97	H4	H4	H3		P21W / P21W	W5W	W5W		P21/5W	P21/5W	P21W	P21W	W5W
COROLLA (_E10_) Wagon 07/92 → 04/97	H4	H4			P21W / P21W	W5W	W5W	P21W	P21/5W	P21/5W	P21W	P21W	W5W
COROLLA (_E11_) 04/97 → 09/99	H4	H4	H3		PY21W / P21W	W5W	W5W	P21W	P21/5W	P21/5W	P21W	P21W	W5W
COROLLA (_E11_) 10/99 → 01/02	HB4	HB3	H3		PY21W / P21W	W5W	W5W	P21W	P21/5W	P21/5W	P21W	P21W	W5W
COROLLA (_E11_) Compact 04/97 → 09/99	H4	H4	H3		PY21W / P21W	W5W	W5W	P21W	P21/5W	P21/5W	P21W	P21W	W5W
COROLLA (_E11_) Compact 10/99 → 01/02	HB4	HB3	H3		PY21W / P21W	W5W	W5W	P21W	P21/5W	P21/5W	P21W	P21W	W5W

COROLLA (_E11_) Liftback 04/97 → 09/99	H4	H4	H3		PY21W / P21W	W5W	W5W	P21W	P21/5W	P21/5W	P21W	P21W	W5W
COROLLA (_E11_) Liftback 10/99 → 01/02	HB4	HB3	H3		PY21W / P21W	W5W	W5W	P21W	P21/5W	P21/5W	P21W	P21W	W5W
COROLLA (_E11_) Wagon 04/97 → 01/02	HB4	HB3	H3		PY21W / W21W	W5W	W5W	P21W	W21/5W	W21/5W	W21W	W21W	W5W
COROLLA (_E12J_, _E12T_) Estate 12/01 → 02/07	H7	HB3	HB4		PY21W / PY21W	W5W	W5W	W16W	W21/5W	W21/5W	W21W	W21W	W5W
COROLLA (_E12J_, _E12T_) Notchback 11/01 → 07/07	H7	HB3	HB4		PY21W / PY21W	W5W	W5W	W16W	W21/5W	W21/5W	W21W	W21W	W5W
COROLLA (_E12J_, ZDE12_, CDE12_) Verso 09/01 → 05/04	HB4	HB3	HB4		PY21W / W21W	W5W	W5W	W5W	W21/5W	W21/5W	W21W	W21W	W5W
COROLLA (E150_) Hatchback 11/06 →	HB4	HB3			P21W / WY21W		W5W		W21/5W	W21/5W	W21W	W16W	W5W
COROLLA (ZZE12_, NDE12_, ZDE12_) 11/01 → 02/07	H7	H7	HB4		P21W / PY21W	W5W	W5W	W16W	P21/5W	P21/5W	P21W	P21W	W5W
COROLLA Verso (ZER_, ZZE_, R1_) 03/04 → 04/09	HB4	HB3	H11 / HB4		PY21W / P21W	WY5W	W5W	W5W	P21/5W	P21/5W	P21W	P21W	W5W
HIACE IV Box (LXH1_, RZH1_, LH1_) 08/95 → 08/06	H4	H4			P21W / PY21W		W5W	P21W	P21/5W	P21/5W	P21W	P21W	W5W
HIACE IV Box (LXH1_, RZH1_, LH1_) 09/06 →	H4	H4			WY21W / PY21W	W5W	W5W	W21W	P21/5W	P21/5W	P21W	P21W	W5W
HIACE IV Bus (LH1_08/95 → 08/06	H4	H4			P21W / PY21W		W5W	P21W	P21/5W	P21/5W	P21W	P21W	W5W
HIACE IV Bus (LH1_) 09/06 →	H4	H4			WY21W / PY21W	W5W	W5W	W21W	P21/5W	P21/5W	P21W	P21W	W5W
HIACE IV Platform/Chassis (LXH1_, RCH1_,K LH1_) 08/95 → 08/06	H4	H4			P21W / PY21W		W5W	P21W	P21/5W	P21/5W	P21W	P21W	W5W
HIACE IV Platform/Chassis (LXH1_, RCH1_,K LH1_) 09/06 →	H4	H4			WY21W / PY21W	W5W	W5W	W21W	P21/5W	P21/5W	P21W	P21W	W5W
HILUX II Pick-up (_N5_, _N6_) 11/82 → 07/97	H4	H4			P21W / P21W	W5W	W5W		P21/5W	P21/5W	P21W	P21W	W5W
HILUX II Pick-up (_N5_, _N6_) 08/97 → 07/01	H4	H4			P21W/ PY21W	W5W	W5W		P21/5W	P21/5W	P21W	P21W	W5W
HILUX II Pick-up (_N5_, _N6_) 08/01 → 07/05	H4	H4			W21W / P21W	W5W	W5W		P21/5W	P21/5W	P21W	W16W	W5W
HILUX III Pick-up (, KUN_, TGN_, LAN_, GGN_) 08/05 →	H4	H4	HB4		P21W / P21W		W5W		P21/5W	P21/5W	P21W	P21W	W5W
IQ (KPJ1_, NGJ1_, KGJ1_, NUJ1_) 01/09 →			H11		WY21W / WY21W	LED	W5W		W21/5W	W21/5W	W21W	W21W	W5W
LAND CRUISER (VDJ20_, UZJ20_) 11/07 →	H4	H4	HB4		PY21W / LED	LED	W5W		LED	LED	W21W	W21W	W5W
LAND CRUISER (VDJ20_, UZJ20_) 11/07 → XENON	D4S	HB3	HB4		PY21W / LED	LED	W5W		LED	LED	W21W	W21W	W5W
LAND CRUISER (KDJ12_, GRJ12_) 09/02 →	H4	H4	HB4		PY21W / W21W	W5W	W5W		W21/5W	W21/5W	W21W	W21W	W5W
LAND CRUISER 80 (_J8_) 01/90 → 02/98	H4	H4	HB4		P21W / P21W	W5W	W5W	P21W	P21/5W	P21/5W	P21W	P21W	W5W
LAND CRUISER 90 (_J9_) 04/95 →	H4	H4	HB4		PY21W / P21W	W5W	W5W	R10W	W21/5W	W21/5W	W21W	W21W	W5W
LAND CRUISER 100 (_J10_) 01/98 →	HB4	HB3	HB4		PY21W / W21W	W5W	W5W		W21/5W	W21/5W	P21W	W21W	W5W
LAND CRUISER 150 (KDJ15_, GRJ15_) 08/09 →	H11	HB3	H11		WY21W / LED	LED	W5W		LED	LED	W21W	W16W	W5W
LAND CRUISER 150 (KDJ15_, GRJ15_) 08/09 → XENON	D4S	HB3	H11		WY21W / LED	LED	W5W		LED	LED	W21W	W16W	W5W
LAND CRUISER Hardtop (_J7_) 07/90 → 05/96	H4	H4			P21W / P21W	W5W	W5W		P21/5W	P21/5W	P21W	P21W	W5W
MR 2 II (SW2_) 01/90 → 05/00	H4	H4	H3		P21W / P21W	W5W	W5W		P21/5W	P21/5W	P21W	P21W	W5W
MR 2 III (ZZW3_) 04/00 → 09/05 SINGLE REFLECTOR	H4	H4	HB4		PY21W / P21W	W5W	W5W		P21/5W	P21/5W	W21W	W21W	W5W
MR 2 III (ZZW3_) 04/00 → 09/05 DUAL REFLECTOR	H7	HB3	HB4		W21W / P21W	W5W	W5W		P21/5W	P21/5W	W21W	W21W	W5W
PASEO Convertible (EL54) 10/96 → 03/99	H4	H4	H1		P21W / P21W	W5W	W5W		P21/5W	P21/5W	P21W	P21W	W5W
PASEO Coupe (EL54) 08/95 → 12/99	H4	H4	H1		P21W / P21W	W5W	W5W	P21W	P21/5W	P21/5W	P21W	P21W	W5W
PICNIC (_XM10) 05/96 → 12/01	H7	HB3	H3		P21W / P21W	W5W	W5W	P21W	P21/5W	P21/5W	P21W	P21W	W5W
PREVIA (MCR3_, ACR3_, CLR3_) 06/00 → 01/06 SINGLE REFLECTOR	H4	H4	HB4		PY21W / W21W	W5W	W5W	W16W	P21/5W	P21/5W	W21W	W16W	W5W
PREVIA (MCR3_, ACR3_, CLR3_) 06/00 → 01/06 DUAL REFLECTOR	H7	HB3	HB4		PY21W / W21W	W5W	W5W	W16W	P21/5W	P21/5W	W21W	W16W	W5W
PREVIA (TCR2_, TCR1_) 05/90 → 08/00	H4	H4	H1		P21W / P21W	W5W	W5W	W16W	P21/5W	P21/5W	P21W	P21W	W5W
PRIUS Hatchback (NHW11_) 05/00 → 01/04	H4	H4			PY21W / P21W	W5W	W5W	W5W	W21/5W	W21/5W	W21W	W16W	W5W
PRIUS Liftback (NHW20_) 08/03 → 03/09	H4	H4	HB4		WY21W / WY21W	W5W	W5W		W21W	W5W	W21W	W21W	W5W
PRIUS PLUS (ZVW4_) 05/11 →	H11	HB3	H11	LED	WY21W / WY21W		W5W		LED	LED	W21W	W21W	W5W
PRIUS (ZVW3_) 01/09 → 03/12	H11	HB3	H11		WY21W / WY21W	LED	W5W		LED	LED	W21W	W21W	W5W
PRIUS C (NHP10_) 09/11 → 2014	H11	HB3			WY21W / WY21W		W5W		LED	LED	W16W	W16W	W5W
PRIUS C (NHP10_) 2015 →	LED	LED			WY21W / WY21W		LED		LED	LED	W16W	W16W	W5W
RAV 4 I (SXA1_) 01/94 → 09/00	H4	H4	H3		PY21W / P21W	W5W	W5W	P21W	P21/5W	P21/5W	P21W	P21W	W5W
RAV 4 I Convertible (SXA1_) 12/97 → 06/00	H4	H4	H3		PY21W / P21W	W5W	W5W	P21W	P21/5W	P21/5W	P21W	P21W	W5W

RAV 4 II (CLA2_, XA2_, ZCA2_, ACA2_) 06/00 → 01/06	H4	H4	HB4		W21W / W21W	W5W	W5W	W21W	W21/5W	W21/5W	W21W	W21W	W5W
RAV 4 III (ACA3_, ACE_, ALA3_, GSA3_, ZSA3_) 11/05 →	H11	HB3	H11		WY21W / WY21W	LED	W5W		LED	LED	P21W	W16W	W5W
RAV 4 IV (ZSA4_, ALA4_) 12/12 →	HB3	HB3		LED	WY21W / WY21W		LED		W21/5W	W21/5W	W21W	W16W	W5W
RAV 4 IV (ZSA4_, ALA4_) 12/12 → XENON	D4S	HB3		LED	WY21W / WY21W		LED		W21/5W	W21/5W	W21W	W16W	W5W
STARLET (EP91) 04/96 → 10/99	H4	H4	H3		PY21W / P21W	W5W	W5W	P21W	P21/5W	P21/5W	P21W	P21W	W5W
SUPRA (JZA80) 05/93 → 08/02	HB3	HB3			W21W / W21W		W5W		W21/5W	W21/5W	W21W	W21W	W5W
URBAN CRUISER (NSP1_, NLP1_, ZSP1_, NCP11_) 07/07 →	H4	H4	H11		WY21W / WY21W		W5W		W21/5W	W21/5W	W21W	W16W	W5W
VERSO (_AUR2_, _ZGR2_) 04/09 →	H11	HB3	H11		WY21W / WY21W		W5W		P21W	R5W	P21W	P21W	W5W
VERSO (_AUR2_, _ZGR2_) 04/09 → XENON	D4R	HB3	H11		WY21W / WY21W		W5W		P21W	R5W	P21W	P21W	W5W
VERSO S (NLP12_, NCP12_, NSP12_) 11/10 →	H4	H4	H11		WY21W / WY21W		W5W		W21/5W	W21/5W	W21W	W16W	W5W
YARIS (_P9_) 11/05 →	H4	H4	H11		WY21W / PY21W	W5W	W5W		W21/5W	W21/5W	P21W	W16W	W5W
YARIS (_P13_) 12/10 →	H4	H4			PY21W / PY21W	W5W	W5W		W21/5W	W21/5W	W21W	W16W	W5W
YARIS (SCP1_, NLP1_, NCP1_) 04/99 → 09/05	H4	H4	HB3		W21W / P21W	W5W	W5W	W16W	P21/5W	P21/5W	P21W	P21W	W5W
YARIS VERSO (_NLP2_, _NCP2_) 11/99 → 09/05	H4	H4	HB4		WY21W / WY21W	W5W	W5W	W16W	W21/5W	W21/5W	W21W	W21W	W5W
VOLKSWAGEN													
AMAROK (2H_,S1B) 09/10 →	H7	H1 / H15	HB4	H15	PY21W / PY21W	W5W	W5W		P21W	P21/5W	H21W	P21W	W5W
BEETLE (9C1, 1C1) 01/98 →	H1	H1	H1		P21W / PY21W	W5W	W5W		P21/5W	P21/5W	P21W	P21W	W5W
BEETLE (9C1, 1C1) 01/98 → FACELIFT	H7	H7	H11		H21W / PY21W	W5W / H21W	W5W		P21/5W	P21/5W	H21W	H21W	C5W
BEETLE (9C1, 1C1) 01/98 → XENON	D2S	H7	H11		P21W/ PY21W	W5W / H21W	W5W		P21/5W	P21/5W	H21W	H21W	C5W
BEETLE (1Y7) Convertible 09/02 → 10/10	H1	H1	H1		H21W / PY21W	W5W / H21W	W5W		P21/5W	P21/5W	P21W	P21W	W5W
BEETLE (1Y7) Convertible 09/02 → 10/10 FACELIFT	H7	H7	H11		H21W / PY21W	W5W / H21W	W5W		P21/5W	P21/5W	H21W	H21W	C5W
BEETLE (1Y7) Convertible 09/02 → 10/10 XENON	D2S	H7	H11		H21W / PY21W	W5W / H21W	W5W		P21/5W	P21/5W	H21W	H21W	C5W
BEETLE (5C1) 04/11 →	H4	H4	H8	W21/5W	H21W / P21W	P21W	W21/5W		W21/5W	W21/5W		W16W	W5W
BEETLE (5C7) Convertible 12/12 →	H4	H4	H8	W21/5W	H21W / P21W	P21W	W21/5W		W21/5W	W21/5W		W16W	W5W
BORA (1J2) 10/98 → 09/05	H4	H4	H3		PY21W / P21W	W5W	W5W		P21W	R5W	P21W	P21W	C5W
BORA (1J2) 10/98 → 09/05 XENON	D2S	H7	H3		H21W / P21W	W5W	W5W		P21W	R5W	P21W	P21W	C5W
BORA (1J6) Estate 05/99 → 05/05 TAILLIGHT	H4	H4	H3		PY21W / P21W	W5W	W5W		P21/5W	P21/5W	P21W	P21W	C5W
BORA (1J6) Estate 05/99 → 05/05 STOP-/TAILLIGHT	H4	H4	H3		PY21W / P21W	W5W	W5W		P21W	R5W	P21W	P21W	C5W
BORA (1J6) Estate 05/99 → 05/05 XENON TAILLIGHT	D2S	H7	H3		H21W / P21W	W5W	W5W		P21/5W	P21/5W	P21W	P21W	C5W
BORA (1J6) Estate 05/99 → 05/05 XENON STOP-/TAILLIGHT	D2S	H7	H3		H21W / P21W	W5W	W5W		P21W	R5W	P21W	P21W	C5W
CADDY II (9K9A) Estate, Van 11/95 → 01/04 STOP-/TAILLIGHT	H4	H4	H3		PY21W / P21W	W5W/ WY5W	W5W		P21/5W	P21/5W	P21W	P21W	W5W
CADDY II (9K9A) Estate, Van 11/95 → 01/04 TAILLIGHT	H4	H4	H3		PY21W / P21W	W5W/ WY5W	W5W	W5W	P21/5W	P21/5W	P21W	P21W	W5W
CADDY II (9U7) Pick-Up 11/95 - 01/04	H4	H4	H3		PY21W / PY21W	W5W/ WY5W	W5W		P21/5W	P21/5W	P21W	P21W	W5W
CADDY III (2KA, 2KH, 2CA, 2CH) 03/04 → SINGLE REFLECTOR	H4	H4	H11 / HB4	P21/5W	PY21W / PY21W	W5W / WY5W	P21/5W		P21/4W	P21/4W	P21W	P21W	C5W
CADDY III (2KA, 2KH, 2CA, 2CH) 03/04 → DUAL REFLECTOR	H7	H1 / H15	H11 / HB4	H15	PY21W / PY21W	W5W / WY5W	W5W		P21/4W	P21/4W	P21W	P21W	C5W
CADDY III (2KA, 2KH, 2CA, 2CH) 03/04 → BI-XENON	D3S	D3S	H11 / HB4	LED	PY21W / PY21W	W5W / WY5W	LED		P21/4W	P21/4W	P21W	P21W	C5W
CADDY IV (SAA, SAB, SAH, SAJ) 05/15 → VERSION 1	H4	H4	H11	W21/5W	H21W / P21W	WY5W	W21/5W		P21W	W5W	P21W	P21W	C5W
CADDY IV (SAA, SAB, SAH, SAJ) 05/15 → VERSION 2	H7	H7	H11	W21/5W	H21W / P21W	WY5W	W21/5W		P21W	W5W	P21W	P21W	C5W
CADDY IV (SAA, SAB, SAH, SAJ) 05/15 → BI-XENON	D8S	D8S	H11	LED	LED / P21W	WY5W	LED		P21W	W5W	P21W	P21W	C5W
CADDY LIFE 06/04 →	H7	H1	H11	P21/5W	PY21W / PY21W	WY5W	W5W		P21W	P21/4W	P21W	P21W	W5W
CC (358) 11/11 →	D3S	D3S	H8	LED	LED / PY21W		LED		LED	LED	LED	W16W	LED
CORRADO (53I) 08/87 → 12/95 SINGLE REFLECTOR	H4	H4	H3		P21W / P21W	W5W	T4W		P21/5W	P21/5W	P21W	P21W	W5W
CORRADO (53I) 08/87 → 12/95 DUAL REFLECTOR	H4	H3	H3		P21W / P21W	W5W	T4W		P21/5W	P21/5W	P21W	P21W	W5W
CRAFTER 30-50 (2E_) Bus, Box 04/06 → 05/13	H7	H7	HB4		PY21W / PY21W	W3W	W5W		P21/5W	P21/5W	P21W	P21W	W5W
CRAFTER 30-50 (2E_) Bus, Box 06/13 →	H7	H7	HB4	P21/5W / LED	PY21W / PY21W	W3W	W21/5W		P21/5W	P21/5W	P21W	P21W	W5W
EOS (1F7, 1F8) 04/06 →	H7	H7	H8		PY21W / PY21W	LED	W5W		LED	LED	P21W	P21W	C5W
EOS (1F7, 1F8) 04/06 → BI-XENON	D1S	D1S	H8		PY21W / PY21W	LED	W5W		LED	LED	P21W	P21W	C5W
FOX (5Z1, 5Z3) 10/03 →	H4	H4	H3		PY21W / PY21W	WY5W	W5W	W2,3W	P21/5W	P21/5W	P21W	P21W	W5W

GOLF III (1H1) 08/91 → 07/98 SINGLE REFLECTOR	H4	H4	H3		P21W / PY21W	W5W	T4W / W5W		P21W	R5W	P21W	P21W	W5W
GOLF III (1H1) 08/91 → 07/98 DUAL REFLECTOR	H1	H1	H3		P21W / PY21W	W5W	T4W / W5W		P21W	R5W	P21W	P21W	W5W
GOLF III (1E7) Convertible 07/93 → 05/98 SINGLE REFLECTOR	H4	H4	H3		P21W / PY21W	W5W	T4W / W5W		P21W	R5W	P21W	P21W	W5W
GOLF III (1E7) Convertible 07/93 → 05/98 DUAL REFLECTOR	H1	H1	H3		P21W / PY21W	W5W	T4W / W5W		P21W	R5W	P21W	P21W	W5W
GOLF III VARIANT (1H5) Estate 07/93 → 04/99 SINGLE REFLECTOR	H4	H4	H3		P21W / PY21W	W5W	T4W / W5W		P21W	P21/4W		P21W	W5W
GOLF III VARIANT (1H5) Estate 07/93 → 04/99 DUAL	H1	H1	H3		P21W / PY21W	W5W	T4W / W5W		P21W	P21/4W		P21W	W5W
GOLF IV (1J1) 08/97 → 06/05	H7	H1	H3		P21W / PY21W	W5W / WY5W	W5W		P21W	R10W	P21W	P21W	C5W
GOLF IV (1J1) 08/97 → 06/05 XENON	D2S	H7	H3		P21W / PY21W	W5W / WY5W	H6W		P21W	R10W	P21W	P21W	C5W
GOLF IV (1E7) Convertible 06/97 → 06/02	H7	H1	H3		P21W / PY21W	W5W	W5W		P21W	R5W	P21W	P21W	C5W
GOLF IV VARIANT (1J5) Estate 05/99 → 06/06	H7	H1	H3		P21W / PY21W	W5W / WY5W	W5W	R5W	P21/5W	P21/5W	P21W	P21W	C5W
GOLF IV VARIANT (1J5) Estate 05/99 → 06/06 XENON	D2S	H7	H3		P21W / PY21W	W5W / WY5W	W5W	R5W	P21/5W	P21/5W	P21W	P21W	C5W
GOLF V (1K1) 10/03 → 02/09	H7	H7	H11		P21W / PY21W	LED	W5W	H6W	P21W	P21W	P21W	P21W	C5W
GOLF V (1K1) 10/03 → 02/09 XENON	D2S	H7	H11		P21W / PY21W	LED	W5W	H6W	P21W	P21W	P21W	P21W	C5W
GOLF V PLUS (5M1, 521) 01/05 →	H7	H7	HB4		P21W / LED	LED	W5W		LED	LED	P21W	P21W	C5W
GOLF V PLUS (5M1, 521) 01/05 → BI-XENON	D1S	D1S	HB4		H21W / LED	LED	W5W		LED	LED	P21W	P21W	C5W
GOLF V VARIANT (1K5) Estate 06/07 →	H7	H7	H11		PY21W / LED	H21W	W5W		P21W	P21W	P21W	P21W	C5W
GOLF V VARIANT (1K5) Estate 06/07 → XENON	D2S	H7	H11		PY21W / LED	H21W	W5W		P21W	P21W	P21W	P21W	C5W
GOLF V CROSSGOLF 01/07 →	H7	H7	HB4		P21W / LED	LED	W5W		LED	LED		LED	LED
GOLF VI (5K1) 10/08 → 11/13	H7	H7	HB4 / H8	H15	W5W / WY21W	LED	W5W		W16W	W16W	W21W	W21W	W5W
GOLF VI (5K1) 10/08 → 11/13 BI-XENON	D1S	D1S	HB4 / H8	LED	LED / WY21W	LED	W5W		W16W	W16W	W21W	W21W	W5W
GOLF VI (517) Convertible 03/11 →	H7	H15	HB4	H15	LED / WY21W	LED	W5W		LED	LED		W16W	W5W
GOLF VI (517) Convertible 03/11 → BI-XENON	D1S	D1S	HB4	LED	LED / WY21W	LED	W5W		LED	LED		W16W	W5W
GOLF VI VARIANT (AJ5) Estate 07/09 → 07/13	H7	H7	HB4	H15	PY21W / PY21W	LED	W5W		P21W	P21W	P21W	P21W	C5W
GOLF VI VARIANT (AJ5) Estate 07/09 → 07/13 BI-XENON	D1S	D1S	HB4		PY21W / PY21W	LED	W5W		P21W	P21W	P21W	P21W	C5W
GOLF VII (5G1, BE1) 08/12 →	H7	H15	H11	H15	/ WY21W		H15		W21W	W21W	W21W	W16W	W5W
GOLF VII (5G1, BE1) 08/12 → BI-XENON	D3S	D3S	H11	LED	H21W / LED		LED		LED	LED	H21W	LED	LED
GOLF VII VARIANT (BA5) Estate 04/13 →	H7	H15	H11	H15	/ WY21W		H15		W21W	W21W	W21W	W16W	W5W
GOLF VII VARIANT (BA5) Estate 04/13 → BI-XENON	D3S	D3S	H11	LED	H21W / LED		LED		LED	LED	W21W	W16W	LED
GOLF ALLTRACK (BA5) 12/14 →	H7	H15	H11	H15	/ WY21W		H15		W21W	W21W	W21W	W16W	W5W
GOLF ALLTRACK (BA5) 12/14 → BI-XENON	D3S	D3S	H11	LED	H21W / LED		LED		LED	LED	W21W	W16W	LED
GOLF SPORTSVAN(AM1) 02/14 →	H7	H15	H11	H15	H21W / WY21W		H15		W21W		W21W	W16W	LED
GOLF SPORTSVAN(AM1) 02/14 →BI-XENON	D3S	D3S	H11	LED	H21W / WY21W		LED		W21W		W21W	W16W	LED
JETTA III (1K2) 08/05 → 10/10	H7	H7	HB4 / H11		PY21W / LED	LED	W5W		LED	LED	P21W	P21W	C5W
JETTA III (1K2) 08/05 → 10/10 XENON	D2S	H7	HB4 / H11		PY21W / LED	LED	W5W		LED	LED	P21W	P21W	C5W
JETTA III (1K2) 08/05 → 10/10 BI-XENON	D1S	D1S	HB4 / H11		PY21W / LED	LED	W5W		LED	LED	P21W	P21W	C5W
JETTA IV (162, 163) 04/10 →	H7	H7	HB4	P21W	PY21W / P21W		W5W	R5W	P21/5W	P21/5W	P21W	P21W	W5W
JETTA IV (162, 163) 04/10 → BI-XENON	D3S	H7	HB4	LED	PY21W / WY21W		LED	R5W	LED	LED	LED	W16W	W5W
LT 28-35 I (281-363) Bus, Box 04/75 → 06/96	H4	H4	H3		P21W / P21W	T4W	T4W		P21/5W	P21/5W	P21W	P21W	R10W
LT 28-35 II (2DM) Bus 04/96 → 07/06	H1	H1			P21W / PY21W	W5W	W5W	P21W	P21/5W	P21/5W	P21W	P21W	C5W
LT 28-35 II (2DM) Bus 04/96 → 07/06 FOG LIGHT	H1	H4			P21W / PY21W	W5W	W5W	P21W	P21/5W	P21/5W	P21W	P21W	C5W
LT 28-46 II (2DX0AE) Box 04/96 → 07/06	H1	H1			P21W / PY21W	W5W	W5W	P21W	P21/5W	P21/5W	P21W	P21W	C5W
LT 28-46 II (2DX0AE) Box 04/96 → 07/06 FOG LIGHT	H1	H4			P21W / PY21W	W5W	W5W	P21W	P21/5W	P21/5W	P21W	P21W	C5W
LT 28-46 II (2DX0AE) Platform 04/96 → 07/06	H1	H1			P21W / PY21W	W5W	W5W		P21W	R5W	P21W	P21W	C5W
LT 28-46 II (2DX0AE) Platform 04/96 → 07/06 FOG LIGHT	H1	H4			P21W / PY21W	W5W	W5W		P21W	R5W	P21W	P21W	C5W
LT 40-55 I (291-512) Box 04/75 → 06/96	H4	H4	H3		P21W / P21W	T4W	T4W		P21/5W	P21/5W	P21W	P21W	R10W
LT 40-55 I (291-512) Platform 04/75 → 06/96	H4	H4	H3		P21W / P21W	T4W	T4W		P21W	R10W	P21W	P21W	R10W
LUPO (6X1, 6E1) 09/98 → 07/05	H4	H4	H3		P21W / PY21W	W5W / WY5W	W5W	W5W	P21/5W	P21/5W	P21W	P21W	C5W
LUPO (6X1, 6E1) 09/98 → 07/05 XENON	D2S	H3	H3		P21W / PY21W	W5W / WY5W	W5W		P21/5W	P21/5W	P21W	P21W	C5W

MULTIVAN T5 (7_) 04/03 → SINGLE HL, TAILLIGHT	H4	H4	HB4	P21W	PY21W / PY21W	W5W / WY5W	W5W		P21W	P21/4W		P21W	C5W
MULTIVAN T5 (7_) 04/03 → DUAL HL, FOG-/TAILLIGHT	H7	H7	HB4	H15	PY21W / PY21W	W5W / WY5W	W5W		P21W	R10W	P21W	P21W	C5W
MULTIVAN T5 (7_) 04/03 → XENON TAILLIGHT	D2S	H15	HB4	H15	PY21W / PY21W	W5W / WY5W	W5W		P21W	P21/5W		P21W	C5W
MULTIVAN T5 (7_) 04/03 → XENON FOG-/TAILLIGHT	D3S	H15	HB4	H15	PY21W / PY21W	W5W / WY5W	W5W		P21W	R10W	P21W	P21W	C5W
PASSAT (3A2, 35I) 02/88 → 10/96 SINGLE HL, TAILLIGHT	H4	H4	H3		P21W / PY21W	W5W / T4W	T4W		P21/5W	P21/5W	P21W	P21W	W5W
PASSAT (3A2, 35I) 02/88 → 10/96 DUAL HL, FOG-/TAILLIGHT	H1	H1	H1		P21W / PY21W	W5W / T4W	T4W	W5W	P21W	R5W	P21W	P21W	W5W
PASSAT (3B2) 08/96 → 11/00 DUAL REFLECTOR	H7	H1	H4		P21W / PY21W	W5W	W5W		P21/5W	P21/5W	P21W	P21W	C5W
PASSAT (3B2) 08/96 → 11/00 TRIPLE REFLECTOR	H7	H4			P21W / PY21W	W5W	W5W		P21/5W	P21/5W	P21W	P21W	C5W
PASSAT (3B2) 08/96 → 11/00 XENON	D2S	H7	H4		P21W / PY21W	W5W	W5W		P21/5W	P21/5W	P21W	P21W	C5W
PASSAT (3B3) 11/00 → 05/05	H7	H7	H3		PY21W / PY21W	WY5W	W5W		P21/4W	P21/4W	P21W	P21W	C5W
PASSAT (3B3) 11/00 → 05/05 XENON	D2S	H7	H3		PY21W / PY21W	WY5W	W5W		P21/4W	P21/4W	P21W	P21W	C5W
PASSAT (3C2) 03/05 → UP TO ID 3C-5-010-000	H7	H7	H11		H21W / LED	LED	W5W		LED	LED	P21W	P21W	C5W
PASSAT (3C2) 03/05 → FROM ID 3C-5-010-000	H7	H7	HB4		H21W / LED	LED	W5W		LED	LED	P21W	P21W	C5W
PASSAT (3C2) 03/05 → 11/10 BI-XENON	D1S	D1S	H11		H21W / LED	LED	W5W		LED	LED	P21W	P21W	C5W
PASSAT (3G2) 08/14 →	H7	H9	H8	W21W	WY21W /		W5W		LED	LED	LED	LED	LED
PASSAT (362) 08/10 →	H7	H7	H8	P21W	PY21W / LED	LED	W5W		LED	P21W	LED	W16W	W5W
PASSAT (362) 08/10 → BI-XENON	D3S	D3S	H8	LED	PY21W / LED	LED	W5W		LED	P21W	LED	W16W	W5W
PASSAT ALLTRACK (365) 01/12 →	H7	H7	H8	P21W	PY21W / LED	LED	W5W		P21W	W5W	LED	W16W	W5W
PASSAT CC (357) 05/08 →	H7	H7	H11		W5W/ RY10W	H21W	W5W		W16W	W16W	W21W	H6W	C5W
PASSAT CC (357) 05/08 → BI-XENON	D1S	D1S	H11		W5W/ RY10W	H21W	W5W		W16W	W16W	W21W	H6W	C5W
PASSAT VARIANT (3A5, 35I) 02/88 → 06/97 SINGLE HL, TAILLIGHT	H4	H4	H3		P21W/ PY21W	W5W	W5W / T4W		P21/5W	P21/5W	P21W	P21W	W5W
PASSAT VARIANT (3A5, 35I) 02/88 → 06/97 DUAL HL, FOG-/ TAILLIGHT	H1	H1	H1		P21W/ PY21W	W5W	W5W / T4W	W5W	P21W	R5W	P21W	P21W	W5W
PASSAT VARIANT (3B5) 05/97 → 12/01 DUAL REFLECTOR	H7	H1	H4		P21W/ PY21W	W5W	W5W		P21/5W	P21/5W	P21W	P21W	C5W
PASSAT VARIANT (3B5) 05/97 → 12/01 TRIPLE REFLECTOR	H7	H4			P21W / PY21W	W5W	W5W		P21/5W	P21/5W	P21W	P21W	C5W
PASSAT VARIANT (3B5) 05/97 → 12/01 XENON	D2S	H7	H4		P21W / PY21W	W5W	W5W		P21/5W	P21/5W	P21W	P21W	C5W
PASSAT VARIANT (3B6) Estate 11/00 → 08/05	H7	H7	H3		PY21W / PY21W	W5W	W5W		P21/4W	P21/4W	P21W	P21W	C5W
PASSAT VARIANT (3B6) Estate 11/00 → 08/05 XENON	D2S	H7	H3		PY21W / PY21W	W5W	W5W		P21/4W	P21/4W	P21W	P21W	C5W
PASSAT VARIANT (3C5) Estate 08/05 → 10/11	H7	H7	H11		H21W / LED	LED	W5W		LED	LED	P21W	P21W	C5W
PASSAT VARIANT (3C5) Estate 08/05 → 10/11 BI-XENON	D1S	D1S	HB4		H21W / LED	LED	W5W		LED	LED	P21W	P21W	C5W
PASSAT VARIANT (3G5) Estate 08/14 →	H7	H9	H8	W21W	WY21W /		W5W		LED	LED	LED	LED	LED
PASSAT VARIANT (365) Estate 08/10 →	H7	H7	H8	P21W	PY21W / LED	LED	W5W		P21W	W5W	LED	W16W	W5W
PASSAT VARIANT (365) Estate 08/10 → BI-XENON	D3S	D3S	H8	LED	PY21W / LED	LED	W5W		P21W	W5W	LED	W16W	W5W
PHAETON (3D_) 04/02 → 2010 XENON	D1S	HB3	H11		H21W / LED	LED	W5W		LED	LED	LED	LED	C5W
PHAETON (3D_) 04/02 → 2010 BI-XENON	D1S	D1S	H11		PY21W / LED	LED	LED		LED	LED	LED	LED	C5W
PHAETON (3D_) 2011 → BI-XENON	D3S	D3S	LED	LED	LED / LED	LED	LED		LED	LED	LED	LED	C5W
POLO (6N1) 10/94 → 10/99	H4	H4	H3		P21W / PY21W	W5W	W5W / T4W	W5W	P21W(W5W)	R5W	P21W	P21W	W5W
POLO (6N1) Van 10/94 → 10/99 SINGLE REFLECTOR	H4	H4	H3		P21W / PY21W	W5W	W5W / T4W	W5W	P21W(W5W)	R5W	P21W	P21W	W5W
POLO (6N1) Van 10/94 → 10/99 DUAL REFLECTOR	H7	H1	H3		P21W / PY21W	W5W	W5W / T4W	W5W	P21W(W5W)	R5W	P21W	P21W	W5W
POLO (6NF) Box Wagon 09/94 → 12/99 SINGLE REFLECTOR	H4	H4	H3		P21W / P21W	W5W	W5W / T4W	W5W	P21W(W5W)	R5W	P21W	P21W	W5W
POLO (6NF) Box Wagon 09/94 → 12/99 DUAL REFLECTOR	H7	H1	H3		P21W / P21W	W5W	W5W / T4W	W5W	P21W(W5W)	R5W	P21W	P21W	W5W
POLO (6N2) 10/99 → 10/01 SINGLE REFLECTOR	H4	H4	H7		P21W / PY21W	WY5W	W5W		P21W	R5W	P21W	P21W	C5W
POLO (6N2) 10/99 → 10/01 DUAL REFLECTOR	H7	H1	H7		P21W / PY21W	WY5W	W5W		P21W	R5W	P21W	P21W	C5W
POLO (6N2) 10/99 → 10/01 XENON	D2S	H1	H7		P21W / PY21W	WY5W	W5W		P21W	R5W	P21W	P21W	C5W
POLO (9N_) 10/01 → 11/09 FOG-/TAILLIGHT	H7	H1	H3		PY21W / PY21W	W5W/ WY5W	W5W		P21/4W	R5W	P21W	P21W	C5W
POLO (9N_) 10/01 → 11/09 TAILLIGHT	H7	H1	H3		PY21W / PY21W	W5W/ WY5W	W5W	W2,3W	P21/4W	P21/4W	P21W	P21W	C5W
POLO (6R, 6C) 06/09 → 04/14 SINGLE REFLECTOR	H4	H4	H8/HB4	P21W	PY21W / PY21W		W5W		P21W	W5W	H21W	H21W	W5W

POLO (6R, 6C) 06/09 → 04/14 DUAL REFLECTOR	H7	H7	H8/HB4	P21W	PY21W / PY21W		W5W		P21W	W5W	H21W	H21W	W5W
POLO (6R, 6C) 06/09 → 04/14 BI-XENON	D3S	D3S	H8/HB4	LED	PY21W / PY21W		W5W		P21W	W5W	H21W	H21W	W5W
POLO (6R, 6C) 05/14 → SINGLE REFLECTOR	H4	H4	H8/HB4	P21W	PY21W / PY21W		W5W		P21W	W16W	H21W	P21W	W5W
POLO (6R, 6C) 05/14 → DUAL REFLECTOR	H7	H7	H8/HB4	P21W	WY21W / PY21W		W5W		P21W	W16W	H21W	P21W	W5W
POLO (6R, 6C) 05/14 → BI-XENON	D3S	D3S	H8/HB4	LED	/ PY21W		W5W		P21W	W16W	H21W	P21W	W5W
POLO (9A4) Notchback 09/02 →	H7	H1	H3		PY21W / PY21W	WY5W	W5W		P21W	R5W	P21W	P21W	C5W
POLO Notchback 05/10 →	H4	H4	HB4		PY21W / PY21W	W5W	W5W		P21W	W5W	P21W	P21W	W5W
POLO CLASSIC (86C, 80) 01/85 - 09/94	H4	H4			P21W / P21W		T4W		P21/5W	P21/5W	P21W	P21W	C5W/ R10W
POLO CLASSIC (6KV2) 11/95 → 07/02	H4	H4	H3		P21W / PY21W	W5W/ WY5W	W5W	R5W	P21/5W	P21/5W	P21W	P21W	C5W
POLO VARIANT (6KV5) 04/97 → 09/01	H4	H4	H3		P21W / PY21W	W5W/ WY5W	W5W	R5W	P21/5W	P21/5W	P21W	P21W	C5W
SANTANA 04/94 →	H4	H4	H3		P21W / PY21W	W5W	W5W	W2,3W	P21/5W	P21/5W	P21W	P21W	W5W
SCIROCCO (137, 138) 05/08 → 07/14	H7	H7	H11		H21W / PY21W	LED	W5W		P21W	P21W	P21W	W16W	W5W
SCIROCCO (137, 138) 05/08 → 07/14 BI-XENON	D1S	D1S	HB4		H21W / PY21W	LED	W5W		P21W	P21W	P21W	W16W	W5W
SCIROCCO (137, 138) 08/14 →	H7	H7	H8	P21W	H21W / LED		W5W		LED	LED	LED	LED	LED
SCIROCCO (137, 138) 08/14 → BI-XENON	D3S	D3S	H8		H21W / LED		LED		LED	LED	LED	LED	LED
SHARAN (7M8, 7M9, 7M6) 05/95 → 12/00 TAILLIGHT	H4	H4	H1		P21W / PY21W		W5W		P21/5W	P21/5W	P21W	P21W	W5W
SHARAN (7M8, 7M9, 7M6) 01/01 → 01/03 FOG-/TAILLIGHT	H4	H4	H1		P21W / PY21W		W5W		P21W	R5W	P21W	P21W	W5W
SHARAN (7M8, 7M9, 7M6) 01/03 → 03/10 TAILLIGHT	H7	H1	H7		P21W / PY21W		W5W		P21/5W	P21/5W	P21W	P21W	W5W
SHARAN (7M8, 7M9, 7M6) 05/95 → 12/00 XENON TAILLIGHT	D2S	H7	H1		P21W / PY21W		W5W		P21/5W	P21/5W	P21W	P21W	W5W
SHARAN (7M8, 7M9, 7M6) 01/01 → 01/03 XENON FOG-/TAILLIGHT	D2S	H7	H7		P21W / PY21W		W5W		P21W	R5W	P21W	P21W	C5W
SHARAN (7M8, 7M9, 7M6) 01/03 → 03/10 XENON TAILLIGHT	D2S	H7	H7		P21W / PY21W		W5W		P21/5W	P21/5W	P21W	P21W	C5W
SHARAN (7N) 05/10 →	H7	H7	H9	P21W	PY21W / PY21W		W5W		P21/5W	P21/5W	H21W	W16W	W5W
SHARAN (7N) 05/10 → BI-XENON	D3S	D3S	H9	LED	PY21W / PY21W		W5W		P21/5W	P21/5W	H21W	W16W	W5W
TARO 04/89 → 03/97	H4	H4			P21W / P21W	W5W	W5W		P21/5W	P21/5W	P21W	P21W	W5W
TIGUAN (5N_) 09/07 → 05/11	H7	H7	HB4		P21W / P21W	WY21W	W5W		P21W	W5W	H21W	W16W	W5W
TIGUAN (5N_) 09/07 → 05/11 BI-XENON	D1S	D1S	HB4		P21W / P21W	WY21W	W5W		P21W	W5W	H21W	W16W	W5W
TIGUAN (5N_) 06/11 →	H7	H15	HB4	H15	PY21W / P21W		W5W		P21W	W16W	H21W		W5W
TIGUAN (5N_) 06/11 → BI-XENON	D3S	D3S	HB4	LED	/ P21W		LED		P21W	W16W	H21W		W5W
TOUAREG (7LA, 7L6, 7L7) 10/02 → 05/10	H7	H7	H11		PY21W / LED	LED	W5W		P21/4W	P21/4W	P21W	H21W	C5W
TOUAREG (7LA, 7L6, 7L7) 10/02 → 05/10 XENON	D1S	H9	H11		PY21W / LED	LED	W5W		P21/4W	P21/4W	P21W	H21W	C5W
TOUAREG (7LA, 7L6, 7L7) 10/02 → 05/10 BI-XENON	D1S	D1S	H11		PY21W / LED	LED	W5W		P21/4W	P21/4W	P21W	H21W	C5W
TOUAREG (7P5) 01/10 → 09/14	H7	H15	HB4	H15	WY21W / PY21W		W5W		P21W	R5W	P21W	W16W	W5W
TOUAREG (7P5) 01/10 → 09/14 BI-XENON	D3S	D3S	HB4	LED	/ PY21W		W5W / LED		P21W	R5W	P21W	W16W	W5W
TOUAREG (7P5) 10/14 → BI-XENON I			H11	LED	WY21W / PY21W		W5W		P21W	R5W	P21W	W16W	LED
TOUAREG (7P5) 10/14 → BI-XENON II	D3S	D3S	H11	LED	WY21W / PY21W		W5W		LED	LED	P21W	W16W	LED
TOURAN (1T1, 1T2) 02/03 → 10/04	H7	H7	H11		PY21W	H21W	W5W		P21W	R5W	P21W	P21W	C5W
TOURAN (1T1, 1T2) 11/04 → UP TO ID 1T-5-083 128	H7	H7	HB4		PY21W	H21W	W5W		P21W	R5W	P21W	P21W	C5W
TOURAN (1T1, 1T2) 05/04 → FROM ID 1T-5-000 001 >	H7	H1			PY21W	H21W	W5W		P21W	R5W	P21W	P21W	C5W
TOURAN (1T1, 1T2) 02/03 → 05/10 XENON	D1S	D2S	H11		PY21W	H21W	W5W		P21W	R5W	P21W	P21W	C5W
TOURAN (1T3) 05/10 →	H7	H15	HB4	H15	PY21W / PY21W	LED	W5W		P21W	P21W	H21W	W16W	W5W
TOURAN (1T3) 05/10 → BI-XENON	D3S	D3S	HB4	LED	PY21W / PY21W	LED	LED		P21W	P21W	H21W	W16W	W5W
TRANSPORTER III Pick-up 07/90 → 04/03	H4	H4	H3		P21W / P21W		T4W		P21W	R5W	P21W	P21W	W5W
TRANSPORTER IV (7_) Bus, Box 09/90 → 04/03 SINGLE REFLECTOR	H4	H4	H3		P21W / PY21W		T4W	W2,3W	P21/5W	P21/5W	P21W	P21W	W5W
TRANSPORTER V (7_) Bus, Box 04/03 → SINGLE REFLECTOR	H4	H4	HB4	P21W	PY21W / PY21W	W5W / WY5W	W5W	R10W	P21W	P21/4W	P21/4W	P21W	C5W
TRANSPORTER V (7_) Bus, Box 04/03 → DUAL REFLECTOR	H7	H1 / H7	HB4	P21W	P21W / PY21W	W5W / WY5W	W5W	R10W	P21W	P21/4W	P21/4W	P21W	C5W
TRANSPORTER V (7_) Bus, Box 04/03 → XENON	D2S / D3S	H15	HB4	H15	PY21W / PY21W	W5W / WY5W	W5W	R10W	P21W	P21/4W	P21/4W	P21W	C5W

UP 12/11 →	H4	H4	HB4	W21/5W	PY21W / PY21W	W5W	W21/5W		P21/4W	P21/4W	P21/4W	P21/4W	R10W
VENTO (1H2) 11/91 → 09/98 SINGLE REFLECTOR	H4	H4	H3		P21W / PY21W	W5W	T4W	R5W	P21/5W	P21/5W	P21W	P21W	W5W
VENTO (1H2) 11/91 → 09/98 DUAL REFLECTOR	H1	H1	H3		P21W / PY21W	W5W	T4W	R5W	P21/5W	P21/5W	P21W	P21W	W5W
VOYAGE 07/08 →	H7	H1	HB4		PY21W / PY21W	W5W	W5W		P21W	W5W	P21W	P21W	W5W
VOLVO													
440 K (445) 08/88 → 12/96	H4	H4			P21W / P21W		T4W	R5W	P21/5W	P21/5W	P21W	P21W	C5W
460 L (464) 09/88 → 07/96	H4	H4	H3		P21W / PY21W	W5W	T4W	R5W	P21/5W	P21/5W	P21W	P21W	C5W
740 (744), 760 (704, 764) 08/81 → 08/92	H4	H4	H3		P21W / P21W		T4W		P21W	R5W	P21W	P21W	T4W
780 04/86 → 07/90	H4	H3	H3		P21W / P21W		T4W		P21W	R5W	P21W	P21W	T4W
850 (LS) 06/91 → 10/97	H4	H4			P21W / P21W	W5W	R5W	W5W	P21W	R5W	P21W	P21W	
850 (LW) Estate 04/92 → 10/97	H4	H4			P21W / P21W	W5W	R5W	W5W	P21/4W	P21/4W	P21W	P21W	
900 01/94 →	H4	H4	H3		P21W / P21W		R5W		P21W	R5W	P21W	P21W	W5W
940 (945) Estate 08/90 → 10/95	H4	H4	H3		P21W / P21W	W5W	R5W	P21W	P21/5W	P21/5W	P21W	P21W	T4W
940 II (944) 08/94 → 10/98	H4	H4	H3		PY21W / PY21W	WY5W	R5W		P21W	R5W	P21W	P21W	T4W
940 II (945) Estate 08/94 → 10/98	H4	H4	H3		PY21W / PY21W	WY5W	R5W	P21W	P21/5W	P21/5W	P21W	P21W	T4W
960 II (964) 07/94 → 12/96 STOP-/TAILLIGHT	H1	H1	H3		PY21W / PY21W	W5W	W5W		P21W	R5W	P21W	P21W	T4W
960 II (965) 07/94 → 12/96 TAILLIGHT	H1	H1	H3		PY21W / PY21W	W5W	W5W	P21W	P21/5W	P21/5W	P21W	P21W	T4W
960 II (965) Estate 08/90 → 07/94	H4	H4	H3		P21W / PY21W	W5W	R5W		P21/5W	P21/5W	P21W	P21W	T4W
C30 10/06 → 12/12	H7	H7	H1		PY21W	WY5W	W5W		P21/4W	P21/4W	P21/4W	P21W	C5W
C30 10/06 → 12/12 XENON	D2S	HB3	H1		PY21W	WY5W	W5W		P21/4W	P21/4W	P21/4W	P21W	C5W
C70 I Convertible 03/98 → 10/05	H7	H7	H1		P21W / PY21W	WY5W	W5W		P21W	R5W	P21W	P21W	W5W
C70 I Coupe 03/97 → 09/02	H7	H7	H1		P21W / PY21W	WY5W	W5W		P21W	R5W	P21W	P21W	W5W
C70 II Convertible 03/06 →	H11	HB3	H11		PY21W	W5W	W5W		P21/5W	P21/5W	P21W	P21W	W5W
C70 II Convertible 03/06 → BI-XENON	D2S	D2S	H11		PY21W	W5W	W5W		P21/5W	P21/5W	P21W	P21W	W5W
S40 I (VS) 07/95 → 12/03 SINGLE REFLECTOR	H4	H4	H3		PY21W / PY21W	W5W	T4W		P21W	R5W	P21W	P21W	W5W
S40 I (VS) 07/95 → 12/03 DUAL REFLECTOR	H7	H7	H3		PY21W / PY21W	W5W	T4W		P21W	R5W	P21W	P21W	W5W
S40 I (VS) 07/95 → 12/03 XENON	D2R	H7	H3		PY21W / PY21W	W5W	T4W		P21W	R5W	P21W	P21W	W5W
S40 II (MS) 01/04 →	H7	HB3	H11		PY21W / PY21W	W5W	W5W		P21W	P21/5W	P21W	P21W	C5W
S40 II (MS) 01/04 → XENON	D1S	H7	H11		PY21W / PY21W	W5W	W5W		P21W	P21/5W	P21W	P21W	C5W
S40 II (MS) 01/04 → BI-XENON	D2S	D2S	H11		PY21W / PY21W	W5W	W5W		P21W	P21/5W	P21W	P21W	C5W
S60 07/00 → 04/10	H7	HB3	H1		PY21W / PY21W	WY5W	W5W		P21W	R5W	P21W	P21W	C5W
S60 11/00 → 04/10 XENON	D2R	H7	H1		PY21W / PY21W	WY5W	W5W		P21W	R5W	P21W	P21W	C5W
S60 II 04/10 →	H7	H9		LED	PY21W / H21W				P21W	P21W	P21W	H21W	C5W
S60 II 04/10 → BI-XENON	D3S	D3S		LED	PY21W / H21W				P21W	P21W	P21W	H21W	C5W
S70 (LS) 11/96 → 11/00	H7	H7	H1		P21W/ PY21W	WY5W	W5W		P21W	R5W	P21W	P21W	W5W
S80 (TS, XY) 05/98 → 07/06 TAILLIGHT	H7	H7	H1		PY21W / PY21W	W5W	W5W		P21W	P21/4W	P21/4W	P21W	W5W
S80 (TS, XY) 05/98 → 07/06 FOG-/TAILLIGHT	H7	H7	H1		PY21W / PY21W	W5W	W5W		P21W	P21/4W	R5W	P21W	W5W
S80 (TS, XY) 05/98 → 07/06 XENON TAILLIGHT	D2R	H7	H1		PY21W / PY21W	W5W	W5W		P21W	P21/4W	P21/4W	P21W	W5W
S80 (TS, XY) 05/98 → 07/06 XENON FOG-/TAILLIGHT	D2R	H7	H1		PY21W / PY21W	W5W	W5W		P21W	P21/4W	R5W	P21W	W5W
S80 II (AS) 03/06 →	H7	H7	H8		PY21W / H21W	WY5W	W5W		P21W	P21W	P21W	P21W	C5W
S80 II (AS) 03/06 → XENON	D1S	H7	H8		PY21W / H21W	WY5W	W5W		P21W	P21W	P21W	P21W	C5W
S80 II (AS) 03/06 → BI-XENON	D1S	D1S	H8		PY21W / H21W	WY5W	W5W		P21W	P21W	P21W	P21W	C5W
S90 11/96 → 12/98	H1	H1	H3		PY21W / PY21W	WY5W	W5W		P21/5W	P21/5W	P21W	P21W	W5W
V40 (VW) Estate 07/95 → 06/04 SINGLE REFLECTOR	H4	H4	H3		PY21W / PY21W	W5W	T4W		P21W	R5W	P21/4W	P21W	C5W
V40 (VW) Estate 07/95 → 06/04 DUAL REFLECTOR	H7	H7	H3		PY21W / PY21W	W5W	T4W		P21W	R5W	P21/4W	P21W	C5W

V40 (VW) Estate 07/95 → 06/04 XENON	D2R	H7	H3		PY21W / PY21W	W5W	T4W		P21W	R5W	P21/4W	P21W	C5W
V40 Hatchback 03/12 →	H7	H9			/ PY21W	WY5W	W5W		P21W	LED	H21W	P21W	LED
V40 Hatchback 03/12 → BI-XENON	D3S	H7		LED	/ PY21W	WY5W	LED		P21W	LED	H21W	P21W	LED
V50 (MW) 04/04 →	H7	H7	H11		P21W/ PY21W	WY5W	W5W		P21W	R5W	P21W	P21W	C5W
V50 (MW) 04/04 → XENON	D2S	HB3	H11		P21W/ PY21W	WY5W	W5W		P21W	R5W	P21W	P21W	C5W
V50 (MW) 04/04 → BI-XENON	D1S	D1S	H11		P21W/ PY21W	WY5W	W5W		P21W	R5W	P21W	P21W	C5W
V60 09/10 →	H7	H9		LED	PY21W / LED	LED			LED	LED	H21W	P21W	C5W
V60 09/10 → XENON	D3S	H9		LED	PY21W / LED	LED			LED	LED	H21W	P21W	C5W
V70 I (LV) 11/96 → 05/00	H7	H7	H1		P21W/ PY21W	WY5W	W5W		P21W	P21/4W	P21/4W	P21W	W5W
V70 II (SW) 03/00 → 08/07 STOP-/TAILLIGHT	H7	HB3	H1		PY21W / PY21W	WY5W	W5W		P21/5W	P21/5W	P21W	P21W	C5W
V70 II (SW) 03/00 → 08/07 TAILLIGHT	H7	HB3	H1		PY21W / PY21W	WY5W	W5W		P21/5W	R5W	P21W	P21W	C5W
V70 II (SW) 03/00 → 08/07 XENON STOP-/TAILLIGHT	D2R	H7	H1		PY21W / PY21W	WY5W	W5W		P21/5W	P21/5W	P21W	P21W	C5W
V70 II (SW) 03/00 → 08/07 BI-XENON STOP-/TAILLIGHT	D1S	D1S	H1		PY21W / PY21W	WY5W	W5W		P21/5W	P21/5W	P21W	P21W	C5W
V70 II (SW) 03/00 → 08/07 XENON TAILLIGHT	D2R	H7	H1		PY21W / PY21W	WY5W	W5W		P21/5W	R5W	P21W	P21W	C5W
V70 II (SW) 03/00 → 08/07 BI-XENON TAILLIGHT	D1S	D1S	H1		PY21W / PY21W	WY5W	W5W		P21/5W	R5W	P21W	P21W	C5W
V70 III (BW) 08/07 →	H7	H7	H8		PY21W / H21W	LED	W5W		LED	LED	P21W	P21W	C5W
V70 III (BW) 08/07 → XENON	D1S	H7	H8		PY21W / H21W	LED	W5W		LED	LED	P21W	P21W	C5W
V90 Estate 11/96 → 12/98	H1	H1	H3		PY21W / PY21W	WY5W	W5W		P21/5W	P21/5W	P21W	P21W	W5W
XC60 05/08 → 2013	H7	H9	H8		PY21W/ LED		W3W		P21W	LED	H21W	P21W	C5W
XC60 05/08 → 2013 BI-XENON	D1S	D1S	H8		PY21W/ LED		W3W		P21W	LED	H21W	P21W	C5W
XC60 2014 →	H7	H9	H8		/ LED		LED		P21W	LED	H21W	P21W	C5W
XC60 2014 → BI-XENON	D3S	D3S	H8		/ LED		LED		P21W	LED	H21W	P21W	C5W
XC70 01/98 →	H7	H7	H3		P21W/ P21W	WY5W	W5W		P21W	R5W	P21W	P21W	W5W
XC70 CROSS COUNTRY 11/97 → 08/07 STOP-/TAILLIGHT	HB3	H7	H1		PY21W / PY21W	WY5W	W5W		P21/5W	R5W	P21W	P21W	C5W
XC70 CROSS COUNTRY 11/97 → 08/07 TAILLIGHT	HB3	H7	H1		PY21W / PY21W	WY5W	W5W		P21/5W	P21/5W	P21W	P21W	C5W
XC70 CROSS COUNTRY 11/97 → 08/07 XENON STOP-/TAILLIGHT	D2R	H7	H1		PY21W / PY21W	WY5W	W5W		P21/5W	R5W	P21W	P21W	C5W
XC70 CROSS COUNTRY 11/97 → 08/07 XENON TAILLIGHT	D2R	H7	H1		PY21W / PY21W	WY5W	W5W		P21/5W	P21/5W	P21W	P21W	C5W
XC70 II 08/07 →	H7	H7	H8		PY21W / H21W	LED	W5W		LED	LED	P21W	P21W	C5W
XC70 II 08/07 → XENON	D1S	H7	H8		PY21W / H21W	LED	W5W		LED	LED	P21W	P21W	C5W
XC90 10/02 →	H7	H7	H1		P21W/ PY21W	WY5W	W5W		P21W	P21/4W	P21/4W	P21W	W5W
XC90 10/02 → XENON	D2R	H7	H1		P21W/ PY21W	WY5W	W5W		P21W	P21/4W	P21/4W	P21W	W5W
XC90 10/02 → BI-XENON	D1S	D1S	H1		P21W / PY21W	WY5W	W5W		P21W	P21/4W	P21/4W	P21W	W5W

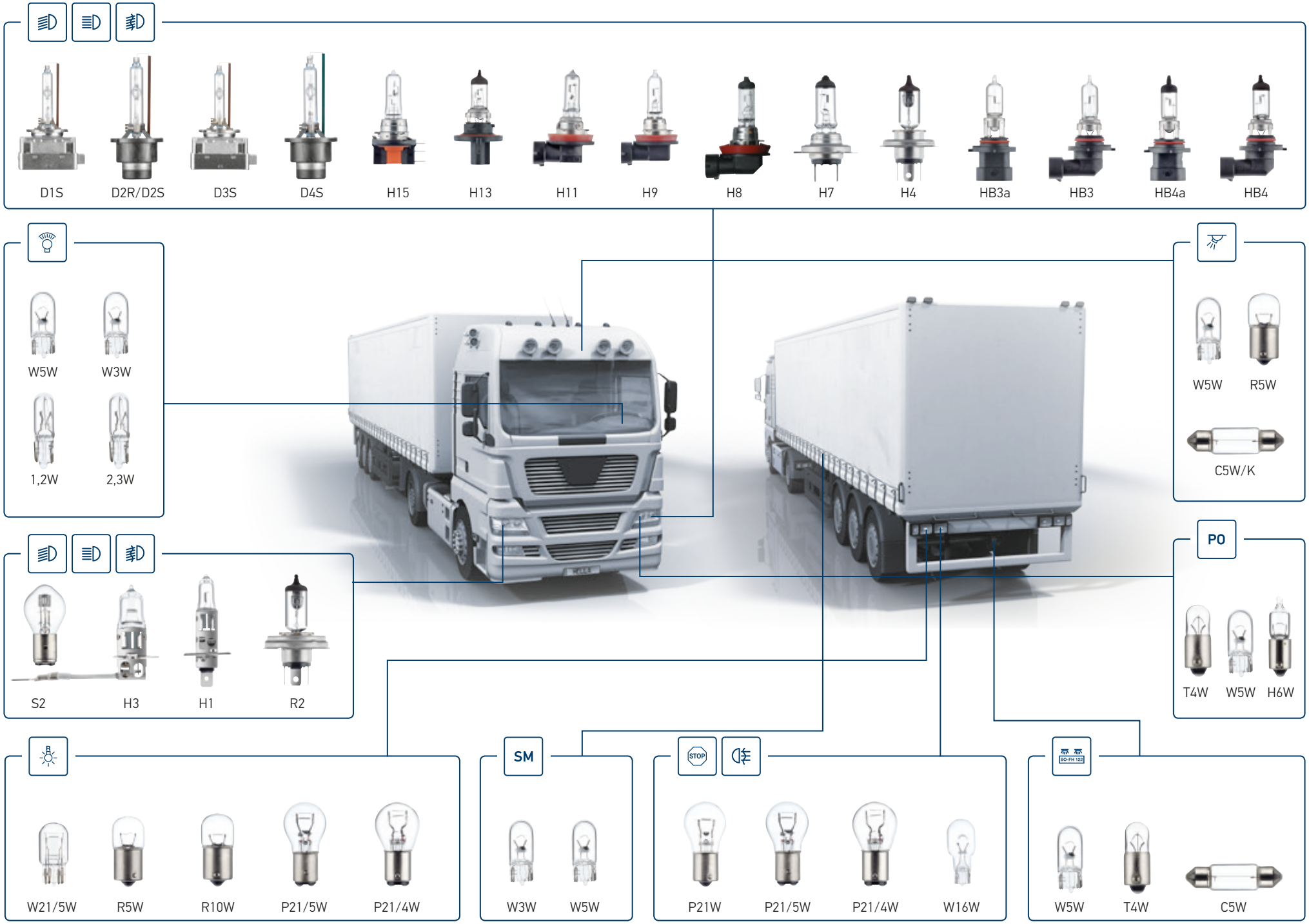
D1S
D2R/D2S
D3S
D4S
H15
H13
H11
H9
H8
H7
H4
HB3a
HB3
HB4a
HB4
W5W
W3W
1,2W
2,3W
W5W
R5W
C5W/K
S2
H3
H1
R2
PO
T4W
W5W
H6W
W21/5W
R5W
R10W
P21/5W
P21/4W
SM
W3W
W5W
STOP
P21W
P21/5W
P21/4W
W16W
W5W
T4W
C5W

24 V			V	W		i
D1S						
	8GS 009 028-111	1	85*	35	PK32d-2	4.300K
	8GS 009 028-621	1	85*	35	PK32d-2	5.000K | +30%
D2S						
	8GS 007 949-261	1	85*	35	P32d-2	4.300K
	8GS 007 949-251	1	85*	35	P32d-2	5.000K | +30%
D2R						
	8GS 007 001-151	1	85*	35	P32d-3	4.300K
	8GS 007 001-241	1	85*	35	P32d-3	5.000K | +30%
D3S						
	8GS 009 028-311	1	42*	35	PK32d-5	4.300K Free of Mercury
D4S						
	8GS 007 949-311	1	42*	35	P32d-5	4.300K Free of Mercury

24 V			V	W		i
H1						
	8GH 002 089-251	1	24	70	P14.5s	
	8GH 002 089-361	1	24	70	P14.5s	Heavy Duty
	8GH 002 089-491	1	24	70	P14.5s	Double Power
H3						
	8GH 002 090-251	1	24	70	PK22s	
	8GH 002 090-471	1	24	70	PK22s	Double Power
H4						
	8GJ 002 525-251	1	24	75/70	P43t	
	8GJ 002 525-281	1	24	75/70	P43t	Heavy Duty
	8GJ 002 525-511	1	24	75/70	P43t	Double Power
R2						
	8GD 002 088-271	1	24	55/50	P45t	Halogen
	8GJ 003 133-242	1	24	75/70	P45t	Halogen
H7						
	8GH 007 157-241	1	24	70	PX26d	
	8GH 007 157-231	1	24	70	PX26d	Double Power

*Lamps to be used with electrical ballast units for 12 V and 24 V vehicles

24 V			V	W		i
H11						
	8GH 008 358-241	1	24	70	PGJ19-2	
	8GH 008 358-251	1	24	70	PGJ19-2	Double Power
S2						
	8GD 002 084-251	1	24	45/40	BA20d	
F2						
	8GA 002 083-251	1	24	35	BA20s	
P21W						
	8GA 002 073-241	10	24	21	BA15s	
	8GA 002 073-251	10	24	21	BA15s	Heavy Duty
PY21W						
	8GA 006 841-241	10	24	21	BAU15s	Amber
	8GA 006 841-251	1	24	21	BAU15s	Amber Heavy Duty

24 V			V	W		i
P21/5W						
	8GD 002 078-241	10	24	21/5	BAY15d	
	8GD 002 078-011	10	24	21/5	BAY15d	Heavy Duty
T4W						
	8GP 002 067-241	10	24	4	BA9s	
	8GP 002 067-261	10	24	4	BA9s	Heavy Duty
H21W						
	8GH 008 417-012	1	24	21	BAY9s	
R						
	8GA 002 072-241	10	24	18	BA15s	
R5W						
	8GA 002 071-241	10	24	5	BA15s	
	8GA 002 071-261	10	24	5	BA15s	Heavy Duty
	8GA 002 071-361	10	24	5	BA15d	2-polar socket

24 V		V	W		i
R10W					
8GA 002 071-251	10	24	10	BA15s	
8GA 002 071-271	10	24	10	BA15s	Heavy Duty
H					
8GP 002 068-241	10	24	2	BA9s	
K					
8GM 002 091-241	10	24	18	SV8.5-8	approx. 15.5/40mm
8GM 002 091-251	10	24	10	SV8.5-8	approx. 11/40mm
8GM 002 091-261	10	24	15	SV8.5-8	approx. 15.5/40mm
M					
8GM 002 094-241	10	24	3	SV7-8	approx. 8.2/30 mm
C5W					
8GM 002 092-241	10	24	5	SV8.5-8	approx. 11/35 mm

24 V		V	W		i
Minihalogen					
8GP 008 285-001	1	24	7,5	BA9s	Xenon
W3W					
8GP 003 594-241	10	24	3	W2.1x9.5d	
W5W					
8GP 003 594-251	10	24	5	W2.1x9.5d	
J					
8GP 002 066-241	10	24	3	BA7s	
W1,2W					
8GP 002 095-241	10	24	1,2	W2x4.6d	
8GA 007 997-181	10	24	2	W2x4.6d	

24 V		V	W		i

W2W

	8GA 008 901-241	10	24	2	W2.1x9.5	

Plastic Socket Lamps

	8GA 007 997-021	10	24	1	W2x4.6d	white
	8GA 007 997-061	10	24	1,2	B8.3d	grey
	8GA 007 997-071	10	24	1,2	B8.5d	grey
	8GA 007 997-191	10	24	1,2	EBS	yellow

24 V		V	W		i

	8GA 007 997-201	10	24	1,2	EBS R6	brown
	8GA 007 997-272	10	24	1,2	EBS N10	beige
	8GA 007 997-261	10	24	1,2	BX8.5d	brown

DAF												
DAF 45 01/91 → 12/00	H4	H4		P21W / W5W	P21W	R5W	P21W	P21W	R5W	R5W		
DAF 55 09/95 → 12/00	H4	H4		P21W / W5W	P21W	R5W	P21W	P21W	R5W	R5W		
DAF 65 01/93 → 02/98	H4	H4		P21W	P21W	R10W	P21W	P21W	R5W	T4W	C5W	R5W
DAF 65 CF 02/98 → 12/00	H4	H4	H3	P21W	P21W	R5W	P21W	P21W	R5W	T4W / W5W	C5W/R5W	W3W
DAF 75 07/92 → 02/98	H4	H4		P21W	P21W	R5W	P21W	P21W				
DAF 85 07/92 → 02/98	H4	H4		P21W	P21W	R10W	P21W	P21W	R5W	T4W	C5W	R5W
DAF 85 CF 02/98 → 12/00	H4	H4	H3	P21W / R5W	P21W	R5W	P21W	P21W				
DAF 95 09/87→ 01/98	H4	H4		P21W	P21W	R10W	P21W	P21W	R5W	T4W	C5W	R5W
DAF 95 XF 01/97 → 09/02	H4	H4	H3	P21W	P21W	R5W	P21W	P21W	R5W	T4W / W5W	C5W	W3W
DAF CF 05/13 →	H7	H1	H11									
DAF CF 65 01/01 →	H7	H1		P21W	P21W	R5W	P21W	P21W	R5W	W5W	R5W	W3W
DAF CF 75 01/01 →	H7	H1		P21W	P21W	R5W	P21W	P21W	R5W	W5W	R5W	W3W
DAF CF 85 01/01 →	H7	H1		P21W	P21W	R5W	P21W	P21W	R5W	W5W	C5W / R5W	W3W
DAF LF 05/13 →	H7	H1	H11									
DAF LF 45 01/01 →	H7	H1	H1 / H3	P21W	P21W	R5W / R10W	P21W	P21W	R5W / R10W	W5W	R5W	
DAF LF 55 01/01 →	H7	H1	H1 / H3	P21W	P21W	R5W	P21W	P21W	R5W	W5W	R5W	
DAF XF 10/12 →	H7	H1	H11									
DAF XF 95 09/02 → 12/06	H7	H1 / H3	H1	P21W	P21W	R5W	P21W	P21W	R5W	W5W	C5W	W3W
DAF XF 105 10/05 →	H7 / D2S Xenon	H1	H3	P21W	P21W	R5W	P21W	P21W	R5W	W5W	C5W	W3W
IRISBUS												
IRISBUS AGORA 01/03 →	H7	H1		P21W	P21/5W	P21/5W	P21W	P21W	C5W	W5W	W5W	W5W
IRISBUS ARWAY 06/06 →	H7	H7		P21W	P21W	P21W	P21W	P21W	C5W	R5W	W5W	
IRISBUS AXER 10/03 → 01/07	H7	H1		P21W	P21/5W	P21/5W	P21W	P21W	C5W	W5W	W5W	
IRISBUS CITELYS 09/05 →	H7	H1		P21W	P21/5W	P21/5W	P21W	P21W	C5W	W5W	W5W	
IRISBUS CROSSWAY 06/06 →	H7	H7		P21W	P21/5W	P21/5W	P21W	P21W	C5W	R5W	W5W	
IRISBUS DAILY TOURYS 11/06 →	H7	H1	H1	PY21W / P21W / W16W	P21W	R5W	P21W	P21W	W5W	W5W	C5W / W5W	
IRISBUS DOMINO 10/03 →	H7	H1		PY21W / P21W	P21/5W	P21/5W	P21W	P21W	C5W	W5W	W5W	
IRISBUS EVADIS 10/03 →	H7	H1		P21W	P21W	R5W	P21W	P21W	C5W	W5W	R5W	R5W
IRISBUS PROWAY 01/09 →	H7	H7	H7	P21W	P21/5W	P21/5W	P21W	P21W	C5W	T4W	T4W	
IRISBUS RECREO 10/03 → 01/07	H7	H1	H1	PY21W / P21W	P21W	R5W	P21W	P21W	W5W	W5W	C5W / W5W	C5W
IVECO												
IVECO Daily I/II 01/78 → 04/99	H4	H4	H3	P21W/W5W	P21W	R5W	P21W	P21W	R5W	T4/W	R5W	
IVECO Daily III 05/99 → 12/06	H7	H7		P21W[1] / PY21W[2]	P21W	R5W/R10W	P21W	P21W	C5W / R5W	W5W	W5W	W3W
IVECO Daily IV 05/06 →	H7	H1	H1	P21W[1] / PY21W[2] / W16W	P21W	R5W	P21W	P21W	W5W	W5W	C5W	W5W
IVECO EuroCargo 01/91 →	H4 / H7	H4 / H7	H3	P21W	P21W	R5W	P21W	P21W	R5W	T4W / W5W	R5W / T4W / W5W	R5W
IVECO EuroStar 01/93 → 02/02	H4	H4 / H3	H3	P21W[1] / PY21W[2]	P21W	R5W	P21W	P21W	R5W	T4W	R5W	T4W
IVECO EuroTech MH 09/98 →	H4	H4	H3	P21W	P21W	R5W	P21W	P21W	R5W / R10W	T4W	R5W / T4W	R5W / W3W
IVECO EuroTech MP 01/92 →	H4	H4	H3	P21W	P21W	R5W	P21W	P21W	R5W / R10W	T4W	R5W / T4W	R5W / W3W
IVECO EuroTech MT 01/92 → 08/98	H4	H3	H3	P21W	P21W	R5W	P21W	P21W	R5W		T4W	R5W
IVECO EuroTrakker 01/93 → 11/04	H4	H4	H3	P21W	P21W	R5W	P21W	P21W	R10W	T4W	R5W/T4W	R5W
IVECO Stralis 02/02 →	H7	H7	H1	P21W	P21W	R5W	P21W	P21W	R10W	W5W		W3W
IVECO Strator 04/10 →	H7	H7	H1	P21W / PY21W	P21W	R5W	P21W	P21W	R10W	W5W	T4W	
IVECO Trakker 10/04 →	H7	H1	H1 / H7	P21W[1] / PY21W[2]	P21W	R5W	P21W	P21W / R5W	P21W / R5W	P21W / W5W	R5W	R5W
Urbanway 05/13 →	H7	H7		LED / LED	LED	LED	LED	LED	LED	LED		

MAN												
MAN CLA 01/06 →	H7	H7	H4	P21W	P21W	R5W	P21W	P21W	R5W	W5W	W5W	
MAN E 2000 05/00 →	H4	H4	H3	P21W	P21W	R5W	P21W	P21W	R10W	T4W	T4W	
MAN EL 01/93 → 01/01	H4	H4	H3	P21W	P21W	R10W	P21W	P21W	C5W	T4W	R10W	R10W
MAN EM 08/87 →	H4	H4	H3	P21W	P21W	R10W	P21W	P21W	C5W	T4W		R10W
MAN F 90 06/86 →	H4[4] / H1[3]	H4 / H3 / H1	H3	P21W	P21W	R5W[6] / R10W[5]	P21W	P21W	R10W	T4W	T4W / R10W	W5W
MAN F 90 Unterflur 06/86 → 09/96	H4[4] / H1[3]	H4 / H3 / H1	H3	P21W	P21W	R5W[6] / R10W[5]	P21W	P21W	R10W	T4W	T4W / R10W	W5W
MAN F 2000 01/94 →	H7[3] / H4[4]	H7[3/4] / H4 / H3	H3	P21W	P21W	R5W[6] / R10W[5]	P21W	P21W	R10W	T4W	T4W / R10W	W5W
MAN G 90 09/87 → 05/95	H4 / R2	H4 / R2	H3	P21W	P21W	R5W[6] / R10W[5]	P21W	P21W		T4W	T4W / R10W	
MAN L 2000 10/93 →	H7[3] / H4[4]	H7[3/4] / H4 / H3	H4 / H3	P21W / P21/5W	P21W	R5W[6] / R10W[5]	P21W	P21W	R10W	T4W / W5W	T4W / R10W	W5W
MAN LION´S CITY 03/96 →	H7 / H1 / D2R	H7 / H4 / H1	H4 / H1	P21W / PY21W	P21W	P21W	P21W	P21W	C5W	W5W	W5W	
MAN LION´S COACH 05/95 →	H7 / D2R Xenon	H7 / H4	H4 / H3	P21W / R5W	P21W / P21/5W	R10W / P21/5W	P21W	P21W	C5W	T4W / W5W	R5W / R10W	W3W
MAN LIONS COMFORT 09/96 →	H7 / H1	H7/H4/H1	H4 / H3	P21W	P21W	R5W	P21W	P21W	C5W	T4W / W5W	R10W	W3W
MAN LION´S STAR 03/91 →	H7 / D2R Xenon	H7 / H4	H4 / H3	P21W	P21W	R10W	P21W	P21W	C5W	W5W	R10W	W3W
MAN M 90 08/88 → 12/98	H4[4] / H1[3]	H4/H3/H1	H3	P21W	P21W	R5W / R10W	P21W	P21W	R10W	T4W	T4W / R10W	W5W
MAN M 2000 L 09/99 →	H7[3]/ H4[4]	H7/H4/H3	H4 / H3	P21W / P21/5W	P21W	R5W[6] / R10W[5]	P21W	P21W	R10W	T4W / W5W	T4W / R10W	W5W
MAN M 2000 M 08/95 → 12/05	H7[3]/ H4[4]	H7/H4/H3	H3	P21W	P21W	R5W[6] / R10W[5]	P21W	P21W	R10W	T4W	T4W / R10W	W5W
MAN NG 08/92 →	H4	H4	H3	P21W	P21W	R10W	P21W	P21W	C5W	T4W	R10W	R10W
MAN NL 09/88 →	H7[3] / H4[4] / D2R Xenon	H7 / H4	H4 / H3	P21W[1]	P21W	R5W	P21W	P21W	C5W	T4W / W5W	R10W	R10W
MAN NÜ 03/96 →	H7[3] / H4[4]	H7 / H4	H4	P21W[1] / PY21W[2]			P21W	P21W	R5W	W5W		
MAN SM 08/87 →	H4	H4	H3	P21W	P21W	R10W	P21W	P21W	R5W	T4W	R5W	
MAN TGA 03/00 →	H7[3] / H4[4] / D2R Xenon	H7 / H4	H4	P21W[1]	P21W	R5W[6] / R10W[5]	P21W	P21W	R10W	T4W / W5W	R10W / T4W	T4W
MAN TGL 04/05 →	H7 / D2R Xenon	H7 / H4	H4	P21W	P21W	R5W	P21W	P21W	R5W	W5W		
MAN TGM 10/05 →	H7 / D2R Xenon	H7 / H4	H4	P21W[1] / PY21W[2]	P21W	R5W	P21W	P21W	R5W		W5W	R5W / W5W
MAN TGS 08/07 →	H7 / D1R / D2R Xenon	H7	H4	P21W[1] / PY21W[2]	P21W	R5W	P21W	P21W	R5W	W5W	W5W	
MAN TGX 10/07 →	H7 / D1R Xenon	H7 / H4	H4	P21W[1] / PY21W[2]	P21W	R5W	P21W	P21W	R5W	W5W / H21W	W5W	
MAN ÜL 09/89 →	H1	H1	H3	P21W	P21W	R5W	P21W	P21W	C5W	T4W		R10W
MERCEDES-BENZ												
MERCEDES-BENZ ACTROS 04/96 →	H4	H4	H1	P21W / P21/5W	P21W	R10W	P21W	P21W	R10W	P21/5W	R10W	W3W
MERCEDES-BENZ ACTROS MP2/MP3 10/02 →	H7 / D2S Xenon	H1	H3	P21W[1] / PY21W[2] / P21/5W	P21W	R10W	P21W	P21W		W5W	C5W / R10W	
MERCEDES-BENZ ACTROS MP4 07/11 →	H7	H1	H3	P21W	P21W	R10W	P21W	P21W	R10W	W5W	C5W	R10W
MERCEDES-BENZ ACTROS MP4 07/11 →	H7	H1	H3	P21W / P21/5W	P21W	R10W	P21W	P21W	R10W	W5W	C5W	R10W
MERCEDES-BENZ ANTOS 07/12 →	H7 / D1S Xenon	H1	H1[1]	PY21W / P21/5W / P21/5W	P21W	R10W	P21W	P21W		W5W		
MERCEDES-BENZ AROCS 01/13 →	H7 / D1S Xenon	H1	H1	PY21W / P21/5W / P21/5W	P21W	R10W	P21W	P21W		W5W		
MERCEDES-BENZ ATEGO 01/98 → 10/04	H4	H4 / H3	H1	P21W / P21/5W	P21W	R10W	P21W	P21W	R10W	W5W	R10W	W3W
MERCEDES-BENZ ATEGO II 10/04 →	H4	H3	H1	PY21W	P21W	R10W	P21W	P21W	R10W	W5W	R10W	R10W
MERCEDES-BENZ ATEGO III 04/13 →	H7	H1	H1	PY21W / P21W	P21W	R5W	P21W	P21W		W5W	R10W	
MERCEDES-BENZ AXOR 01/02 → 10/04	H7[3] / H4[4]	H4[4] / H3[4] / H1	H3 / H1	P21W / P21/5W	P21W	R10W	P21W	P21W	R10W	W5W	R10W	W3W
MERCEDES-BENZ AXOR II 10/04 →	H7	H1	H3	P21W / P21/5W	P21W	R10W	P21W	P21W	R10W	W5W	R10W	R10W
MERCEDES-BENZ CAPACITY (O 530 GL) 04/07 →	H1	H1	H3	PY21W / P21W	P21/5W	P21/5W	P21W	P21W	C5W	T4W	R10W	

MERCEDES-BENZ CITARO (O 530) 01/98 →	H4[4] / H1[3]	H4[4] / H1[3]	H3	P21W[1] / PY21W[2]	P21/5W	P21/5W	P21W	P21W	C5W	T4W	C5W / R10W	W3W
MERCEDES-BENZ CITO (O 520) 09/98 →	H1	H1	H3	P21W	P21W	R5W	P21W	P21W	R10W	T4W	R10W	
MERCEDES-BENZ CONECTO (O 345) 11/01 →	H4[4] /H1[3]	H4[4] /H1[3]	H3 / H1	P21W	P21W	R10W	P21W	P21W	C5W	W5W	R10W	
MERCEDES-BENZ ECONIC 03/98 →	H1	H1	H3	P21W	P21W	R10W	P21W	P21W		T4W	C5W	
MERCEDES-BENZ ECONIC II 04/13 →	H1	H1	H3	PY21W / P21W	P21W	R10W	P21W	P21W		T4W		
MERCEDES-BENZ INTEGRO (O 550) 09/96 →	H7	H1	H1	P21W	P21W	R5W	P21W	P21W	C5W	W5W	R10W	
MERCEDES-BENZ INTOURO 01/05 →	H7	H7	H1	P21W	P21W	R5W	P21W	P21W	C5W		R10W	
MERCEDES-BENZ LK/LN2 01/84 → 12/84	H3	H4	H3	P21W	P21W	R10W	P21W	P21W	R10W	T4W		R5W
MERCEDES-BENZ MK 12/87 → 09/96	H4 / R2	H4 / H3 / R2	H3	P21W	P21W	R10W	P21W	P21W	R10W	T4W	R5W	C5W
MERCEDES-BENZ NG 08/73 → 09/96	R2	H3	H3	P21W						T4W	R5W	
MERCEDES-BENZ O 100 01/94 →	H4	H4	H3	P21W	P21W	R5W	P21W	P21W	C5W	W5W		
MERCEDES-BENZ O 302 01/64 → 11/64	R2	R2		P21W	P21W	R10W	P21W	P21W	C5W	T4W		
MERCEDES-BENZ O 340 01/91 → 06/95	H4	H4	H3	P21W	P21W	R10W	P21W	P21W	C5W	T4W	R10W	C5W
MERCEDES-BENZ O 404 09/91 → 10/99	H1	H1		P21W	P21W	R10W	P21W	P21W	C5W	R5W	R5W	W5W
MERCEDES-BENZ O 405 09/84 →	H4	H4	H3	P21W	P21W	R5W	P21W	P21W	C5W	R5W	R10W	
MERCEDES-BENZ O 407 03/87 → 11/01	H4	H4		P21W	P21W	R10W	P21W	P21W	R10W	T4W	R10W	W3W
MERCEDES-BENZ O 408 09/89 → 12/98 I	H4	H4	H3	PY21W / P21W	P21W	R10W	P21W / P21/5W	P21W	C5W	T4W	R10W	
MERCEDES-BENZ O 408 09/89 → 12/98 II	H7	H7	H3	PY21W / P21W	P21W	R10W	P21W / P21/5W	P21W	C5W	W5W	R10W	
MERCEDES-BENZ SK 07/87 → 09/96	H4 / R2	H4 / H3 / R2	H3	P21W	P21W	R10W	P21W	P21W	R10W	T4W	R5W	R5W
MERCEDES-BENZ TOURINO (O 510) 10/03 →	H4	H4		P21W	P21/5W	P21/5W / R5W	P21W	P21W	C5W	W5W	R10W	W3W
MERCEDES-BENZ TOURISMO (O 350) 09/94 →	H1	H1		P21W	P21W	R5W	P21W	P21W	C5W	R5W	R5W	
MERCEDES-BENZ TOURO (O 500) 10/01 →	H4	H1		P21W	P21W	R5W	P21W	P21W	R10W	W5W	R10W	
MERCEDES-BENZ TRAVEGO (O 580) 10/99 →	H7 / D2S Xenon	H1	H3	P21W	P21/5W	P21/5W	P21W	P21W	C5W	W5W	T4W / R10W	W3W
MERCEDES-BENZ UNIMOG 01/66 →	H4	H1	H3	P21W / P21/5W	P21W	R10W	P21W	P21W	R10W	T4W	W5W	
MERCEDES-BENZ ZETROS 09/08 →	H1	H1	H3	P21W / P21/5W	P21W	R10W	P21W	P21W	R10W	W5W	W5W	R5W
MULTICAR												
MULTICAR Fumo 09/01 →	H4	H4	H3	P21W[1] / PY21W[2]	P21W	R10W	P21W	P21W	W5W	T4W		
MULTICAR M26 06/92 → 09/10	H4	H4	H3	P21W	P21W	R10W	P21W	P21W	R10W	T4W		
MULTICAR Tremo 09/98 →	H4	H4		P21W / R5W	P21W	R10W	P21W	P21W	R10W	R5W		
NEOPLAN												
NEOPLAN Centroliner 10/98 →	H7	H7		P21W		P21/5W	P21W	P21W	C5W	W5W	T4W	
NEOPLAN Cityliner 04/73 →	H7	H7	H3		P21W	R10W	P21W	P21W	C5W	W5W		
NEOPLAN Euroliner 10/98 →	H7	H7		P21W		P21/5W	P21W	P21W	C5W	W5W	T4W	
NEOPLAN Jetliner 09/73 → 09/73	H1	H1	H3	P21W		R5W	P21W	P21W	C5W	W5W	C5W	W5W
NEOPLAN Skyliner 09/73 →	H7	H7	H7	P21W	P21W	R10W	P21W	P21W	C5W	W5W		W3W
NEOPLAN Spaceliner 09/79 →	H4	H4		P21W / R5W	P21W	P21/5W	P21W	P21W	C5W	R5W		
NEOPLAN Starliner 09/96 →	H7	H7	H3		P21W	R10W	P21W	P21W	C5W	W5W		
NEOPLAN Tourliner 09/02 →	H7	H7	H7		P21W	R10W	P21W	P21W	C5W	W5W		
NEOPLAN Transliner 12/88 →	H1	H1	H3	P21W		R5W	P21W	P21W	C5W	W5W	C5W	W5W
NEOPLAN Trendliner 09/04 →	H7	H7	H7	P21W	P21W	R5W	P21W	P21W	C5W	T4W	R5W	
NISSAN												
NISSAN ATELON 09/00 →	H1	H4		P21W	P21W	R10W	P21W	P21W	W5W	W3W	W5W	
NISSAN CABSTAR E 10/98 → 10/06	H4	H4	H1	P21W / W5W	P21W	R10W	P21W	P21W	P21W	R5W / W5W		
NISSAN CABSTAR 10/06 → 07/11	HB4	HB4		P21W						W5W		

RENAULT TRUCKS												
RENAULT TRUCKS Agora 01/96 →	H4 / H1	H4 / H1	H3	P21W / P21W	P21/5W	P21/5W	P21W	P21W	C5W	T4W	R10W / C5W	
RENAULT TRUCKS C-Serie 250 P - 320 PK 01/13 →	H7	H15		PY21W / P21W	P21W	R5W	P21W	P21W	W5W	W5W	W5W	
RENAULT TRUCKS C-Serie 380 P - 520 TK 01/13 →	H7 / D1S	H1	H11	LED / PY21W	P21W	R5W	P21W	P21W	R5W	W5W	W5W	
RENAULT TRUCKS D-Serie 01/13 →	H7	H15	H11	PY21W / P21W	P21W	R5W	P21W	P21W	R5W	W5W	W5W	
RENAULT TRUCKS Kerax 06/97 →	H1	H1/H3	H13 / H24	P21W / W5W	P21W	R5W	P21W	P21W	R10W	W5W	W5W	
RENAULT TRUCKS K-Serie 01/13 →	H4	H4	H11	PY21W / PY21W / PY21W	P21W	R5W	P21W	P21W	R5W	W5W	W5W	
RENAULT TRUCKS Magnum 02/92 →	H4	H4	H2	P21W / T4W	P21W	R5W	P21W	P21W	R5W	T4W	R10W	W3W
RENAULT TRUCKS Magnum 06/01 →	H7	H1	H1 / H2	P21W[1] / PY21W[2]	P21W	R5W	P21W	P21W	R5W	W5W	R5W	W3W
RENAULT TRUCKS Major 05/91 → 10/91	H4	H4	H3	P21W	P21W	R10W	P21W	P21W	R5W	T4W		
RENAULT TRUCKS Manager 09/91 → 10/91	H1	H1		P21W / R5W	P21W	R10W	P21W	P21W	R5W	T4W		
RENAULT TRUCKS Mascott 01/99 → 06/04	H4	H4	H1	P21W[1] / PY21W[2]	P21W	R5W / R10W	P21W	P21W	C5W	W5W	W3W	W3W
RENAULT TRUCKS Maxity 03/07 →	H4	H4	H1	P21W	P21W	P21W	P21W	P21W			R10W	
RENAULT TRUCKS Maxter 10/92 → 06/97	H4	H4	H3	P21W / T4W	P21W	R5W	P21W	P21W	R5W	T4W	R5W	
RENAULT TRUCKS Midliner 09/83 → 01/00	H4	H4	H2	P21W	P21W	R5W	P21W	P21W	R5W	T4W	R5W	
RENAULT TRUCKS Midlum 01/00 →	H1	H3 / H1	H2[4] / H1[3]	P21W	P21W	R10W	P21W	P21W	R10W	W5W	W5W	W3W
RENAULT TRUCKS Premium Distribution 04/96 →	H1	H1	H1	P21W / R5W	P21W	R10W / R5W	P21W	P21W	R10W / R5W	W5W	W5W	W3W
RENAULT TRUCKS Premium Route 04/96 →	H1	H1	H1	P21W / R5W	P21W	R10W / R5W	P21W	P21W	R10W / R5W	W5W	W5W	W3W
RENAULT TRUCKS Premium II Distribution 10/05 →	H7	H1	H3	P21W[1] / PY21W[2] / R5W	P21W	R5W	P21W	P21W	R5W	W5W		
RENAULT TRUCKS Premium II Lander 10/06 →	H7	H1	H3	P21W / PY21W / R5W	P21W	R5W	P21W	P21W	R5W	W5W		
RENAULT TRUCKS Premium II Route 10/05 →	H7	H1	H3	P21W[1] / PY21W[2]	P21W	R5W	P21W	P21W	R5W	W5W		
RENAULT TRUCKS T-Serie 01/13 →	H7 / D1S	H1	H11	LED / PY21W	P21W	R5W	P21W	P21W	R5W	W5W	W5W	
SCANIA												
SCANIA 3 - Serie 01/88 → 12/96	H4	H4	H1	P21W / R5W	P21W	R5W	P21W	P21W	R5W	R5W	R5W	R5W
SCANIA 3 - Serie Bus 01/89 → 12/97	H4	H4	H1	P21W / R5W	P21W	R5W	P21W	P21W	R5W		R5W	R5W
SCANIA 4 - Serie 09/95 → 09/04	H4	H4	H1	P21W / R5W	P21W	R5W	P21W	P21W	R5W	R5W	R5W	R5W
SCANIA P, G, R, T - Serie 03/04 → SINGLE REFLECTOR	H4	H4 / H1 / H3	H1	P21W / P21W	P21W	R5W	P21W	P21W	R5W / C5W	T4W	R5W	
SCANIA P, G, R, T - Serie 03/04 → DOUBLE REFLECTOR	H7	H1 / H1 / H3	H1	H21W / P21W	P21W	R5W	P21W	P21W	R5W / C5W	T4W	R5W	
SCANIA P, G, R, T - Serie 03/04 → XENON	D2R	H7 / H1 / H3	H1	H21W / P21W / P21W	P21W	R5W	P21W	P21W	R5W / C5W	T4W	R5W	
VOLVO												
VOLVO 7700 06/06 →	H7	H7	H3	P21W	P21W	P21/5W	P21W	P21W	C5W	W5W	C5W	
VOLVO 9700 04/01 →	H7	H7	H3	P21W[1] / PY21W[2]	P21/5W	P21/5W	P21W	P21W	C5W	T4W		
VOLVO 9900 10/01 →	H7	H7	H3		P21W	R5W	P21W	P21W	C5W	T4W	C5W	
VOLVO B 9 01/02 →	H7	H7	H3	PY21W / PY21W / P21W	P21/5W	P21/5W	P21W	P21W	C5W	T4W		
VOLVO B 12 01/92 →	H7	H7	H3	P21W		R5W	P21W	P21W	C5W	T4W		
VOLVO F 10 08/77→12/94	H4	H4	H3	P21W	P21W	R5W	P21W	P21W	R5W	T4W	R5W	C5W
VOLVO F 12 08/77→12/94	H4	H4	H3	P21W	P21W	R5W	P21W	P21W	R5W	R5W	R5W	R5W
VOLVO F 16 10/87 → 12/87	H4	H4	H3	P21W / R5W	P21W	R5W	P21W	P21W	R5W	R5W	R5W	R5W
VOLVO FE 05/06 →	H4	H3	H3	P21W	P21W	R5W	P21W	P21W	R5W		R5W	R5W
VOLVO FE II 05/12 →	H4	H4	H11	P21W	P21W	R5W	P21W	P21W	R5W	LED	W5W	

HELLA PORTUGAL
Av. Sidónio Pais, n.º 20 - R/C Esq.
1050-215 Lisboa
Portugal

Telf.+351 21 608 09 70
Fax: +351 21 407 26 38
portugal@hella.com

© HELLA KGaA Hueck & Co., Lippstadt
J01187/08.16/

Sujeito a modificações técnicas e de preço.

www.hella.com/bulbs