BRIEF INFORMATION

Electronic immobiliser

PRODUCT FEATURES

Application
The returning or replacement of a stolen vehicle leads to a financial loss and also long "downtime". The immobiliser is, however, a good theft deterrent. The HELLA electronic immobiliser secures your agricultural and construction vehicles and also commercial vehicles against unauthorised use. Following installation of the immobiliser, this device is fully integrated in the vehicle and cannot be detected by unauthorised persons. It can be configured directly by the vehicle manufacturer.

Design/function
The electronic ignition lock communicates via CAN bus. Programming can be carried out at the factory or by the vehicle manufacturer. The only thing required is a Peak CAN adapter. The device recognises an authorised user via the ignition key. The key also serves as a storage medium for various vehicle data, such as operating hours and it can be read directly on the PC. The storage of this data is made possible by an integrated, programmable transponder in the ignition key. The electronic immobiliser can be installed behind a plastic dashboard with or without an ignition lock.

Activation/deactivation of the immobiliser:
When the ignition is activated (terminal 15), a message is transmitted on the CAN bus. This can be processed by a higher-level control unit, e.g. the engine control unit.
This allows the immobiliser to be deactivated.
As long as the message has not been processed by the control unit, the immobiliser function remains active so that no unauthorised engine start can take place.
On request, a customer-specific, cryptically encoded CAN bus communication can be implemented.

PRODUCT FEATURES

Configuration options

- → Programming the key
- → Delete key as required
- → Delete all keys
- → Write data on the relevant address in the transponder (action only)
- → Change baud rate
- → Standard / Extended ID
- → Serial number of the receiver
- → Repeat cycle of the receiver
- → ID for CAN message
- → Transmission data with recognised key

Services

- → Read transponder
- → Query status (action only)
- → Parameter query
- → Querying the operating hours counter

TECHNICAL DETAILS

Technical data	
Voltage range	7 – 60 V
Rated voltage	12 V / 24 V / 48 V
Temperature range	- 40°C to + 85°C
Antenna current consumption active	Type 80 mA
Antenna current consumption inactive	Type 25 mA
Stand-by power (Terminal 30)	Max. 15 µA (Terminal 15 Off)
Plug connector	5-pin Super Seal
Manufacturer	Tyco
CAN Bus interface	CAN 2.0B
CAN Bus speed	Switchable 250 kbit / s, 500 kbit / s, 1 Mbit / s
Housing	Plastic

Dimensional sketch

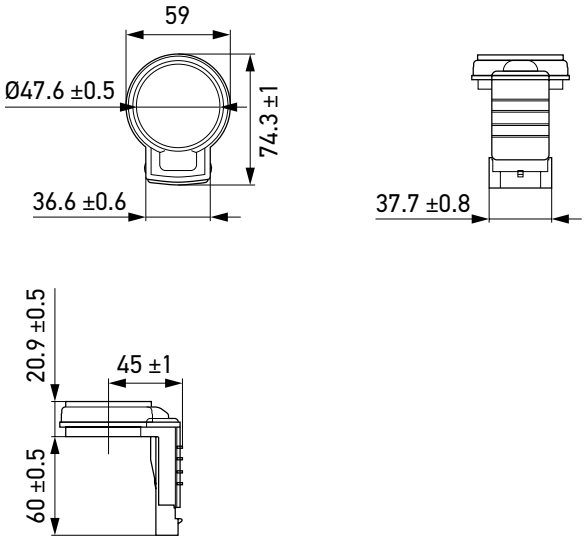

RF module	
Transponder type	TIRIS (Texas Instruments)
Transmission frequency	Type 134.2 kHz
Coding procedure	FSK
Range	Type 4 cm

Transponder	
Transponder type	Digital signature transponder with data memory, TIRIS (Texas Instruments)
Immobiliser key	80 Bit
Mutual key	80 Bit
Transmission frequency	Type 134.2 kHz
Coding procedure	FSK
Range	Type 4 cm

INSTALLATION DRAWING TRANSPONDER

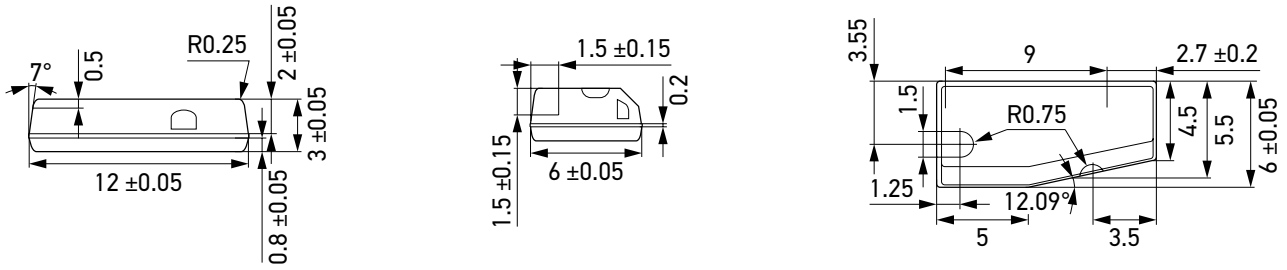

BLOCK DIAGRAM

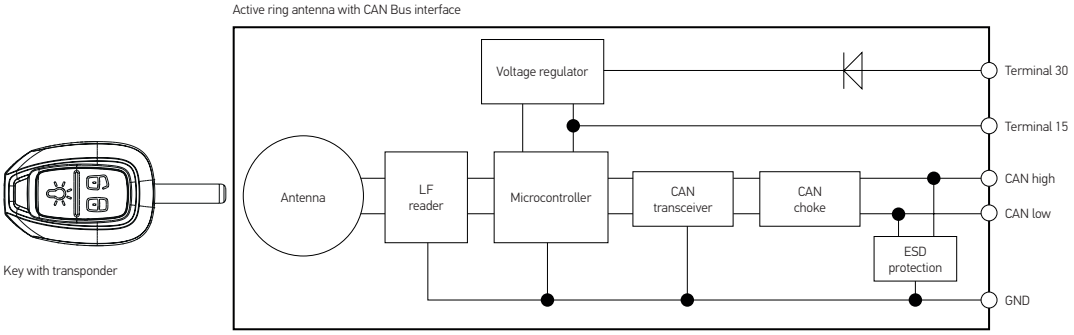

Pin assignment

1	GND
2	Terminal 15
3	Terminal 30
4	CAN low
5	CAN high

PROGRAM OVERVIEW

Description	Part number
Electronic immobiliser	**On request**